Smarter. Greener. Together.

Industrial Automation Headquarters

Taiwan: Delta Electronics, Inc.
Taoyuan Technology Center
No.18, Xinglong Rd., Taoyuan District,
Taoyuan City 33068, Taiwan
TEL: +886-3-362-6301 / FAX: +886-3-371-6301

Asia

China: Delta Electronics (Shanghai) Co., Ltd.
No.182 Minyu Rd., Pudong Shanghai, P.R.C.
Post code : 201209
TEL: +86-21-6872-3988 / FAX: +86-21-6872-3996
Customer Service: 400-820-9595

Japan: Delta Electronics (Japan), Inc.
Industrial Automation Sales Department
2-1-14 Shibadaimon, Minato-ku
Tokyo, Japan 105-0012
TEL: +81-3-5733-1155 / FAX: +81-3-5733-1255

Korea: Delta Electronics (Korea), Inc.
1511, 219, Gasan Digital 1-Ro., Geumcheon-gu,
Seoul, 08501 South Korea
TEL: +82-2-515-5305 / FAX: +82-2-515-5302

Singapore: Delta Energy Systems (Singapore) Pte Ltd.
4 Kaki Bukit Avenue 1, #05-04, Singapore 417939
TEL: +65-6747-5155 / FAX: +65-6744-9228

India: Delta Electronics (India) Pvt. Ltd.
Plot No.43, Sector 35, HSIIDC Gurgaon,
PIN 122001, Haryana, India
TEL: +91-124-4874900 / FAX: +91-124-4874945

Thailand: Delta Electronics (Thailand) PCL.
909 Soi 9, Moo 4, Bangpoo Industrial Estate (E.P.Z),
Pattana 1 Rd., T.Phraksa, A.Muang,
Samutprakarn 10280, Thailand
TEL: +66-2709-2800 / FAX: +66-2709-2827

Australia: Delta Electronics (Australia) Pty Ltd.
Unit 20-21/45 Normanby Rd., Notting Hill Vic 3168, Australia
TEL: +61-3-9543-3720

Americas

USA: Delta Electronics (Americas) Ltd.
5101 Davis Drive, Research Triangle Park, NC 27709, U.S.A.
TEL: +1-919-767-3813 / FAX: +1-919-767-3969

Brazil: Delta Electronics Brazil
Rua Itapeva, 26 - 3°, andar Edificio Itapeva,
One - Bela Vista 01332-000 - São Paulo - SP - Brazil
TEL: +55-12-3932-2300 / FAX: +55-12-3932-237

Mexico: Delta Electronics International Mexico S.A. de C.V.
Gustavo Baz No. 309 Edificio E PB 103
Colonia La Loma, CP 54060
Tlalnepantla, Estado de México
TEL: +52-55-3603-9200

EMEA

EMEA Headquarters: Delta Electronics (Netherlands) B.V.
Sales: Sales.IA.EMEA@deltaww.com
Marketing: Marketing.IA.EMEA@deltaww.com
Technical Support: iatechnicalsupport@deltaww.com
Customer Support: Customer-Support@deltaww.com
Service: Service.IA.emea@deltaww.com
TEL: +31(0)40 800 3900

BENELUX: Delta Electronics (Netherlands) B.V.
Automotive Campus 260, 5708 JZ Helmond, The Netherlands
Mail: Sales.IA.Benelux@deltaww.com
TEL: +31(0)40 800 3900

DACH: Delta Electronics (Netherlands) B.V.
Coesterweg 45, D-59494 Soest, Germany
Mail: Sales.IA.DACH@deltaww.com
TEL: +49(0)2921 987 0

France: Delta Electronics (France) S.A.
ZI du bois Challand 2, 15 rue des Pyrénées,
Lisses, 91090 Evry Cedex, France
Mail: Sales.IA.FR@deltaww.com
TEL: +33(0)1 69 77 82 60

Iberia: Delta Electronics Solutions (Spain) S.L.U
Ctra. De Villaverde a Vallecas, 265 1º Dcha Ed.
Hormigueras – P.I. de Vallecas 28031 Madrid
TEL: +34(0)91 223 74 20

Carrer Llacuna 166, 08018 Barcelona, Spain
Mail: Sales.IA.Iberia@deltaww.com

Italy: Delta Electronics (Italy) S.r.l.
Via Meda 2–22060 Novedrate(CO)
Piazza Grazioli 18 00186 Roma Italy
Mail: Sales.IA.Italy@deltaww.com
TEL: +39 039 8900365

Russia: Delta Energy System LLC
Vereyskaya Plaza II, office 112 Vereyskaya str.
17 121357 Moscow Russia
Mail: Sales.IA.RU@deltaww.com
TEL: +7 495 644 3240

Turkey: Delta Greentech Elektronik San. Ltd. Sti. (Turkey)
Şerifali Mah. Hendem Cad. Kule Sok. No:16-A
34775 Ümraniye – İstanbul
Mail: Sales.IA.Turkey@deltaww.com
TEL: + 90 216 499 9910

MEA: Eltek Dubai (Eltek MEA DMCC)
OFFICE 2504, 25th Floor, Saba Tower 1,
Jumeirah Lakes Towers, Dubai, UAE
Mail: Sales.IA.MEA@deltaww.com
TEL: +971(0)4 2690148

DELTA_IA-MDS_VFD-VJ_UM_EN_20220301

*We reserve the right to change the information in this manual without prior notice.

Delta Hybrid Servo Drive VFD-VJ Series - User Manual

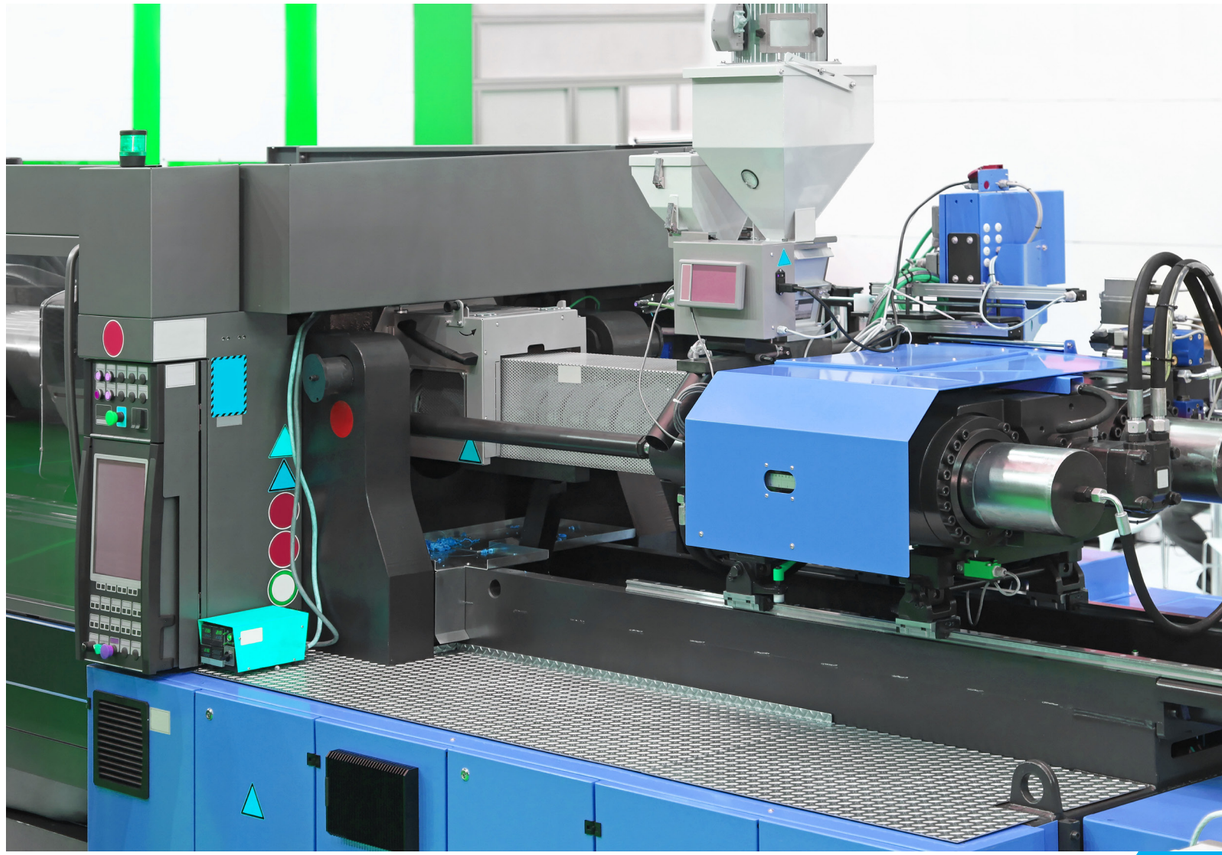

Delta Hybrid Servo Drive VFD-VJ Series User Manual

www.deltaww.com

Smarter. Greener. Together.

Copyright notice

©Delta Electronics, Inc. All rights reserved.
All information contained in this user manual is the exclusive property of Delta Electronics Inc. (hereinafter referred to as "Delta ") and is protected by copyright law and all other laws. Delta retains the exclusive rights of this user manual in accordance with the copyright law and all other laws. No parts in this manual may be reproduced, transmitted, transcribed, translated or used in any other ways without the prior consent of Delta.

Limitation of Liability

The contents of this user manual are only for the use of the products manufactured by Delta. Except as defined in special mandatory laws, Delta provides this user manual “as is” and does not offer any kind of warranty through this user manual for using the product, either express or implied, including but not limited to the following: (i) this product will meet your needs or expectations; (ii) the information contained in the product is current and correct; (iii) the product does not infringe any rights of any other person. You shall bear your own risk to use this product.

In no event shall Delta, its subsidiaries, affiliates, managers, employees, agents, partners and licensors be liable for any direct, indirect, incidental, special, derivative or consequential damages (including but not limited to the damages for loss of profits, goodwill, use or other intangible losses) unless the laws contains special mandatory provisions to the contrary.

Delta reserves the right to make changes to the user manual and the products described in the user manual without prior notice and afterwards.

Preface

This manual is to be used for the installation, parameter setting, troubleshooting, and daily maintenance of the hybrid servo drive. To guarantee safe operation of the equipment, read the following safety guidelines before connecting power to the hybrid servo drive. Keep this operating manual at hand and distribute to all users for reference.

To ensure the safety of operators and equipment, only qualified personnel familiar with hybrid servo drive are to do installation, start-up and maintenance. Always read this manual thoroughly before using VFD-VJ series Hybrid Servo Drive, especially the WARNING, DANGER and CAUTION notes. Failure to comply may result in personal injury and equipment damage. If you have any questions, please contact your dealer.

Firmware version: V1.08

PLEASE READ PRIOR TO INSTALLATION FOR SAFETY.

DANGER	☑ AC input power must be disconnected before any wiring to the hybrid servo drive is made. ☑ Even if the power has been turned off, a charge may remain in the DC-link capacitors with hazardous voltages before the POWER LED is OFF. Do not touch the internal circuit and components. For safe maintenance, use a multimeter to measure the voltage across the +1 and – terminals. The measured value should be lower than $25V_{DC}$ for the system to operate normally. ☑ There are highly sensitive MOS components on the printed circuit boards. These components are especially sensitive to static electricity. Do not touch these components or the circuit boards before taking anti-static measures. Never reassemble internal components or wiring. ☑ Ground the hybrid servo drive using the ground terminal. The grounding method must comply with the laws of the region where the hybrid servo drive is to be installed. ☑ This series of products is used to control the permanent magnet synchronous motors. It cannot be used for single-phase motors or for other purposes. ☑ This series of products cannot be used on occasions that may endanger personal safety. ☑ Please prevent children or unauthorized personnel from approaching the hybrid servo drive.
WARNING	☑ Never connect the output terminals U/T1, V/T2 and W/T3 of the hybrid servo drive directly to the AC mains circuit power supply. ☑ After finishing the wiring of the hybrid servo drive, check if U/T1, V/T2, and W/T3 are short-circuited to ground with a multimeter. Do NOT power the drive if short circuits occur. Eliminate the short circuits before the drive is powered. ☑ DO NOT use Hi-pot test for internal components. The semi-conductor used in hybrid servo drive easily damage by high-voltage. ☑ Even if the permanent magnet synchronous motor stops, a charge may remain in the main circuit terminals of the hybrid servo drive with hazardous voltages. ☑ Only qualified persons are allowed to install, wire and maintain hybrid servo

	drives. ☑ When the hybrid servo drive uses an external terminal as its source of operation commands, the motor may start running immediately after the power is supplied. In this case, it may be dangerous to any on-site personnel. ☑ The oil tank adjusts the oil volume, and the oil volume must be enough for the hybrid servo drive to orun. It is absolutely prohibited to run the oil pump without oil. ☑ The oil temperature of the oil tank must be in control within the required range, and if necessary, install a cooler. ☑ Release completely the air inside the system before you add more pressure to the system. ☑ Do a no-load running of the oil pump under the jog mode to ensure sufficient lubrication of the oil pump.
CAUTION	☑ DO NOT install the hybrid servo drive in a place subjected to high temperature, direct sunlight, high humidity, excessive vibration, corrosive gases or liquids, or airborne dust or metallic particles. ☑ Only use hybrid servo drives within specification. Failure to comply may result in fire, explosion or electric shock. ☑ When the motor cable between hybrid servo drive and motor is too long, the layer insulation of the motor may be damaged. Please add an AC output reactor to prevent damage to the motor. Refer to Appendix A-4 Reactor for details. ☑ The rated voltage for hybrid servo drive must be ≤ 240V (≤ 480V for 460V models) and the mains supply current capacity must be ≤ 5000A RMS (≤10000A RMS for the ≥ 40hp (30kW) models). ☑ Pay attention to the following when transporting and installing this package (including wooden crate, wood stave and carton box): 1. If you need to sterilize, deworm the wooden crate or carton box, do not use steamed smoke sterilization or you will damage the product inside. 2. Use other ways to sterilize or deworm. 3. You may use high temperatures to sterilize or deworm. Leave the packaging materials in an environment of over 56°C for 30 minutes. 4. It is strictly forbidden to use steamed smoking sterilization. The warranty does not cover the product damaged by steamed smoking sterilization

NOTE

- For a detailed explanation of the product specifications, the cover or the safety shields will be disassembled on some pictures or graphics. When the product is put to operation, please install the top cover and safety shield and ensure correct wiring. Refer to the manual to ensure safe operation.
- The figures in this manual are for reference only, they may be slightly different from your actual drive, but it will not affect your customer rights.
- The content of this manual may be revised without prior notice. Please consult our distributors or download the latest version at https://downloadcenter.deltaww.com/en-US/downloadcenter

Table of Contents

Copyright Notice

Limitation of Liability

Chapter1. Description of Hybrid Servo Drives

1-1 Receiving and Inspection 1-2
1-2 Product Specifications 1-4
1-3 Overview of Hybrid Servo Systems 1-8
1-4 Product Installation 1-11
1-5 Product Dimensions 1-17

Chapter 2. Wiring

2-1 Description of Wiring 2-4
2-2 Description of Terminals on Main Circuit 2-12
2-3 Description of Terminals on Control Circuit 2-21

Chapter 3. Machine Adjustment Procedure

3-1 Description of Control Panel 3-2
3-2 System Setup and Machine Adjustment Flowcharts 3-7
3-3 Machine Adjustment Procedure 3-9
3-4 Confluence Machine Tuning Proce 3-19
3-5 Confluence / Diversion Mode Adjustment Procedure 3-22

Chapter 4. Description of Parameters

4-1 Summary of Parameters 4-2
4-2 Detailed Description of Parameters 4-24

Chapter 5. Method of Anomaly Diagnosis

5-1 Unusual Signal 5-2
5-2 Dynamic fault processing and troubleshooting 5-20
5-3 Resolution for electromagnetic noise and induction noise 5-25
5-4 Environment and Facilities for Installation 5-26
5-5 Common Problems, Diagnosis and Troubleshooting 5-27

Chapter 6. Suggestions and Error Corrections for Hybrid Servo Drives

6-1 Maintenance and Inspections 6-2
6-2 Greasy Dirt Problem 6-6
6-3 Fiber Dust Problem 6-7
6-4 Erosion Problem 6-8
6-5 Industrial Dust Problem 6-9
6-6 Wiring and Installation Problem 6-12
6-7 Multi-function Input/ Output Terminals Problem 6-13
6-8 Maintenance of Coupling 6-14

Appendix A: Optional Accessories

A-1 Braking Resistor Selection Chart A-2
A-2 Non-Fuse Circuit Breaker A-7
A-3 Fuse A-8
A-4 Reactor A-9
A-4-1 AC Reactor A-10
A-4-2 Zero Phase Reactor A-13
A-5 Digital Keypad KPC-CC01 ..... A-14
A-6 EMI Filter A-17
A-7 Speed Feedback Encoder A-20
A-8 Wall-Mounted Installation A-22

Appendix B: CANopen overview

B-1 CANopen overview B-3
B-2 Wiring for CANopen B-6
B-3 CANopen Communication Interface Descriptions B-7
B-3-1 CANopen Control Mode Selection B-7
B-3-2 DS402 Standard Control Mode B-8
B-3-3 Using Delta Standard (old definition) B-12
B-3-4 Using Delta Standard (new definition) B-13
B-4 CANopen Supporting Index B-14

Appendix C: MSJ 220V & 380V Hybrid Servo Motor

C-1 Product Description C-2
C-2 Model Name Explanation C-2
C-3 Motor Specifications C-3
C-4 Torque – Rotation characteristic curve C-6
C-5 Product Appearance and Dimensions C-9
C-6 Wiring of Servo Oil Pump C-11

Chapter 1 Description of Hybrid Servo Drives

1-1 Receiving and Inspection

1-2 Product Specifications

1-3 Overview of Hybrid Servo Systems

1-4 Product Installation

1-5 Product Dimensions

The hybrid servo drive should be kept in the shipping carton or crate before installation. To retain the warranty coverage, the hybrid servo drive should be stored properly if not used in a short time. Storage conditions are:

CAUTION	☑ Store in a well-ventilated, clean and dry location. ☑ Store in place with ambient temperature range of -20˚C to +60˚C. ☑ Store in place with a relative humidity range of 0% to 90% and non-condensing environment. ☑ Avoid storing the product in an environment containing corrosive gases and liquids. ☑ Place the product on an appropriate stand and DO NOT place it on the ground directly. Put exsiccator in the package if in a critical environment. ☑ Installing in location free from direct sunlight and vibration. ☑ DO NOT store in an area with rapid changes in temperature even though the humidity is within range. It may still cause condensation and frost. ☑ If the hybrid servo drive is unopened and stored for more than three months, the ambient temperature should not be above 30˚C. Temperature above 30˚C may affect the quality of electrolytic capacitors especially when they stored without power supply. It is always not recommended to store the product without supplying power for more than one year. ☑ If the hybrid servo drive was installed but not used for a certain period of time, especially in building sites or extremely humid and dusty places, it is always recommended to remove the hybrid servo drive to an environment that meets the above-mentioned requirements.

1-1 Receiving and Inspection

This VFD-VJ hybrid servo drive has gone through tough tests at the factory before shipping under quality control and strengthened the packaging method to secure it. Upon receiving the hybrid servo drive, please check the following items immediately:

☑ Inspect the drive to assure it was not damaged during shipping.

☑ Make sure the model name on the nameplate corresponds to that of your registered information in the shipping carton.

If the registered information does not match your purchase order, or if there is any problem in the product, please contact the dealer or distributor.

Air Cooled:

Nameplate:

Take the 30kW, 40HP, 230V_{AC} 3-Phase model as an example.

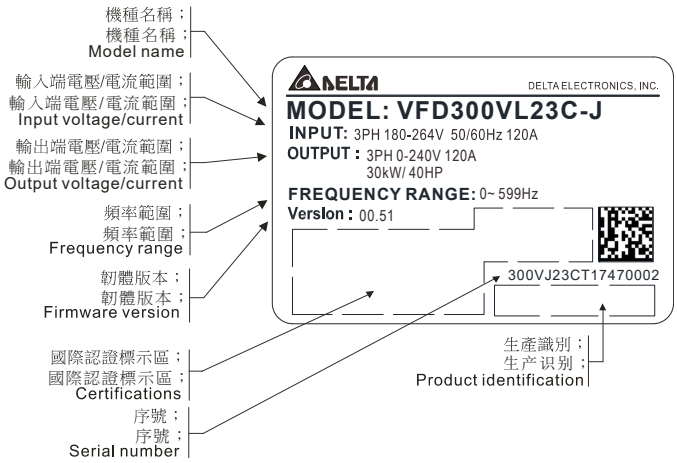

Model Name:

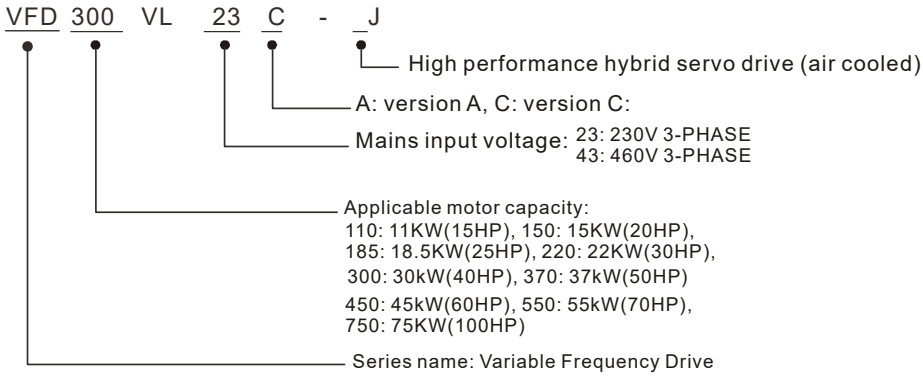

Serial Number:

VJ-A:

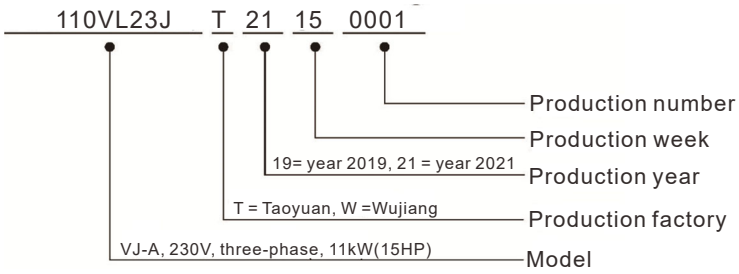

VJ-C:

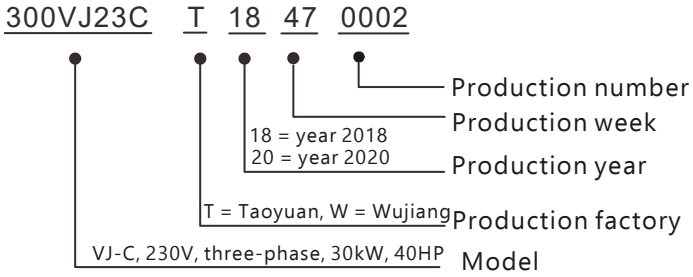
300VJ23C T 18 47 0002
Production number
Production week
18 = year 2018
20 = year 2020
Production year
T = Taoyuan, W = Wujiang
Production factory
VJ-C, 230V, three-phase, 30kW, 40HP
Model

1-2 Product Specifications

Air Cooled VFD-VJ-A 230V models

Frame Size		C	D		
Model VFD-_ _ _VL23A-J		110	150	185	220
Power (KW)		11	15	18.5	22
Horse Power (HP)		15	20	25	30
Rated Output Current(A)		41.1	53	70	79
Output	Continuous Output Current for 60 sec (A)	62	90	119	79
	Continuous Output Current for 20 sec (A)	70	106	140	119
Power supply	Rated Input Current(A)	47	56	73	90
	Rated Input Voltage(V)	Three-Phase Power: 200~240V 50/60Hz			
	Mains Voltage Tolerance	±10% (180~264V)			
	Mains Frequency Tolerance	±5% (47~63Hz)			
Weight (kg)		10	13	13	13

Air Cooled VFD-VJ-A 460V models

Frame Size		D		E6		
Model VFD-_ _ _VL43_ -J		300A	370A	450A	550A	750A
Power (KW)		30	37	45	55	75
Horse Power (HP)		40	50	60	75	100
Output	Rated Output Current(A)	60	73	91	110	150
	Continuous Output Current for 60 sec (A)	102	124	155	187	255
	Continuous Output Current for 20 sec (A)	120	146	182	220	300
	Carrier Frequency (Hz)	4k ~ 10k adjustable				
Power supply	Rated Input Current(A)	60	73	91	110	150
	Rated Input Voltage(V)	Three-Phase Power: 380~480V · 50/60Hz				
	Mains Voltage Tolerance	±10% (342~528V)				
	Mains Frequency Tolerance	±5% (47~63Hz)				
Weight (kg)		12	12	39	39	39
Braking Unit		Built-in	Built-in	Built-in	Built-in	Built-in

General Specifications: VJ-A

Control Method		SVPWM
Speed Detector		Resolver
Speed Command Input		DC 0~10V, support 3-point calibration of analog input
Pressure Command Input		DC 0~10V, support 3-point calibration of analog input
Pressure Feedback Input		Support voltage type: DC 0 ~ 10V and current type: 4 ~ 20mA (For detailed instruction and settings, see Pr03-12 for more information)
Multi-function Input Signal		6 ch DC24V
Multi-function Output Signal		2 ch DC48V 50mA(max), 1 ch Relay output
Analog Output Voltage		1ch DC 0 ~ 10V and -10 ~ 10V, max. load: 2mA
Communication Port		RJ45 x2, USB x1
Communication Protocol		CANopen and Modbus (can be used at the same time)
Accessories	Speed Feedback PG Card	Built-In
	Multiple Drives Convergent Flow Card	Built-In
	Brake Resistor	Required
	Pressure Sensor	Required (Compatible with pressure sensor with output signal 0~10V or 4~ 20mA. Use Pr03-10 for maximum output voltage of pressure feedback, Pr03-11 for minimum output voltage of pressure feedback, Pr03-12 for output signal settings and Pr00-08 for maximum pressure setting.)Required (Compatible with pressure sensor with output signal 0~10V or 4~ 20mA. Use Pr03-10 for maximum output voltage of pressure feedback, Pr03-11 for minimum output voltage of pressure feedback, Pr03-12 for output signal settings and Pr00-08 for maximum pressure setting.)
	EMI filter	Optional (See appendix A-7 in the user manual.)
Protection Function	Motor Protection	Real-time temperature monitoring and protection, electronic thermal relay protection
	Over-Current Protection	Output over-current protection
	Ground Leakage Current Protection	80% higher than drive's rated current
	Voltage Protection	Over-voltage level: V_{DC} > 415/830V; Low-voltage Level: V_{DC} < 180/360V
	Mains Input Over-voltage Protection	Varistor (MOV)
	Over-temperature Protection	Monitoring the temperature of Capacitor, IGBT, Braking Chopper and Motor.
Environment	Protection Level	NEMA 1/IP20
	Operation Temperature	-10ºC ~ 45ºC (14°F ~ 113°F) (When the ambient temperature is around 45~60ºC, you need to decrease the rated current by 3%.)
	Storage Temperature	-20ºC ~ 60ºC (-4°F ~ 140°F)
	Humidity	Below 90% RH (non-condensing)
	Vibration	Below 20Hz: 1.0G; between 20 and 60Hz: 0.6G
	Cooling Method	Fan Cooling
	Installation Altitude	When the installation is between 0~1000m, do NOT expose the hybrid servo drive to poor environmental conditions, such as dust, direct sunlight, corrosive / inflammable gasses, humidity, liquid and vibration environment. The salt in the air must be less than 0.01mg/cm^2 every year.
Certifications		CE

Air Cooled VFD-VJ-C 230 models

Frame Size		E4	
Model VFD-_ _ _VL23_-J		300 C	370 C
Power (KW)		30	37
Horse Power (HP)		40	50
Output	Rated Output Current(A)	120	146
	Continuous Output Current for 60 sec (A)	204	248
	Continuous Output Current for 20 sec (A)	240	292
	Carrier Frequency (Hz)	4k ~ 10k adjustable	
Power Supply	Rated Input Current(A)	120	146
	Rated Input Voltage(V)	Three-Phase Power: 200V~240V, 50Hz/ 60Hz	
	Mains Voltage Tolerance	-15% ~ +10% (170V~264V)	
	Mains Frequency Tolerance	±5% (47~63Hz)	
Weight (kg)		44	
Brake Units		Built-In	

Air Cooled VFD-VJ-C 460V models

Frame Size		C				D		E4		
Model VFD-_ _ _VL43_-J		110 C	150 C	185 C	220 C	300 C	370 C	450 C	550 C	750 C
Power (KW)		11	15	18.5	22	30	37	45	55	75
Horse Power (HP)		15	20	25	30	40	50	60	75	100
Output	Rated Output Current((A)	21	27	34	41	60	73	91	110	150
	Continuous Output Current for 60 sec (A)	36	46	58	70	102	124	155	187	255
	Continuous Output Current for 20 sec (A)	42	54	68	82	120	146	182	220	300
	Carrier Frequency (Hz)	4k ~ 10k adjustable								
Power Supply	Rated Input Current(A)	24	30	37	47	60	73	91	110	150
	Rated Input Voltage(V)	Three-Phase Power: 380V ~ 480V, 50Hz / 60Hz								
	Mains Voltage Tolerance	-15% ~ +10% (323V ~ 528V)								
	Mains Frequency Tolerance	±5% (47~63Hz)								
Weight (kg)		9				13		36	46	
Brake Units		Built-In								

*When the carrier frequency is 4~ 5kHz, the rated current reaches 100%. However, as the carrier frequency increases, the rated current decreases. Therefore, the overload capacity decreases. Refer to parameter Pr01-33 for more information.

**To continuously improve our products, we reserve the rights to change features and specifications without further notice.

General Specifications: VJ-C

Control Method		SVPWM
Speed Detector		Resolver
Speed Command Input		DC 0~10V, support 3-point calibration of analog input
Pressure Command Input		DC 0~10V, support 3-point calibration of analog input
Pressure Feedback Input		Support voltage type: DC 0 ~ 10V and current type: 4 ~ 20mA (For detailed instruction and settings, see Pr03-12 for more information)
Multi-function Input Signal		6 ch DC24V
Multi-function Output Signal		2 ch DC48V 50mA(max), 1 ch Relay output
Analog Output Voltage		2 channels: 1ch DC 0 ~ 10V and 1ch DC -10 ~ 10V, max. load: 2mA
Communication Port		RJ45 x2, USB x1
Communication Protocol		CANopen and Modbus (can be used at the same time)
Accessories	Speed Feedback PG Card	Built-In
	Multiple Drives Convergent Flow Card	Built-In
	Brake Resistor	Required
	Pressure Sensor	Required (Compatible with pressure sensor with output signal 0~10V or 4~ 20mA. Use Pr03-10 for maximum output voltage of pressure feedback, Pr03-11 for minimum output voltage of pressure feedback, Pr03-12 for output signal settings and Pr00-08 for maximum pressure setting.)
	EMI filter	Optional (See appendix A-7 in the user manual.)
Protection Function	Motor Protection	Real-time temperature monitoring and protection, electronic thermal relay protection (supports KTY84-130/PTC/temperature protection switch)
	Over-Current Protection	Output over-current protection and brake over-current protection
	Ground Leakage Current Protection	80% higher than drive's rated current
	Voltage Protection	Over-voltage level: V_{DC} > 415/830V; Low-voltage Level: V_{DC} < 180/360V
	Input Surge Protection	Varistor (MOV)
	Over-temperature Protection	Monitoring the temperature of Capacitor, IGBT, Braking Chopper and Motor.
	Brake Resistor Protection	Open circuited, low resistor value
Environment	Protection Level	NEMA 1/IP20
	Operation Temperature	-10ºC ~ 45ºC (14°F ~ 113°F) (When the ambient temperature is around 45~60ºC, you need to decrease the rated current by 3%.)
	Storage Temperature	-20ºC ~ 60ºC (-4°F ~ 140°F)
	Humidity	Below 90% RH (non-condensing)
	Vibration	Below 20Hz: 1.0G; between 20 and 60Hz: 0.6G
	Cooling Method	Model names end with J: Fan Cooling
	Installation Altitude	When the installation is between 0~1000m, do NOT expose the hybrid servo drive to bad environmental conditions, such as dust, direct sunlight, corrosive/inflammable gasses, humidity, liquid and vibration environment. The salt in the air must be less than 0.01mg/cm^2 every year.
Certifications		CE

*We have applied for UL certification for 230V models and we plan to have 460V models certified for UL by Q4 2020.

1-3 Overview of Hybrid Servo Systems

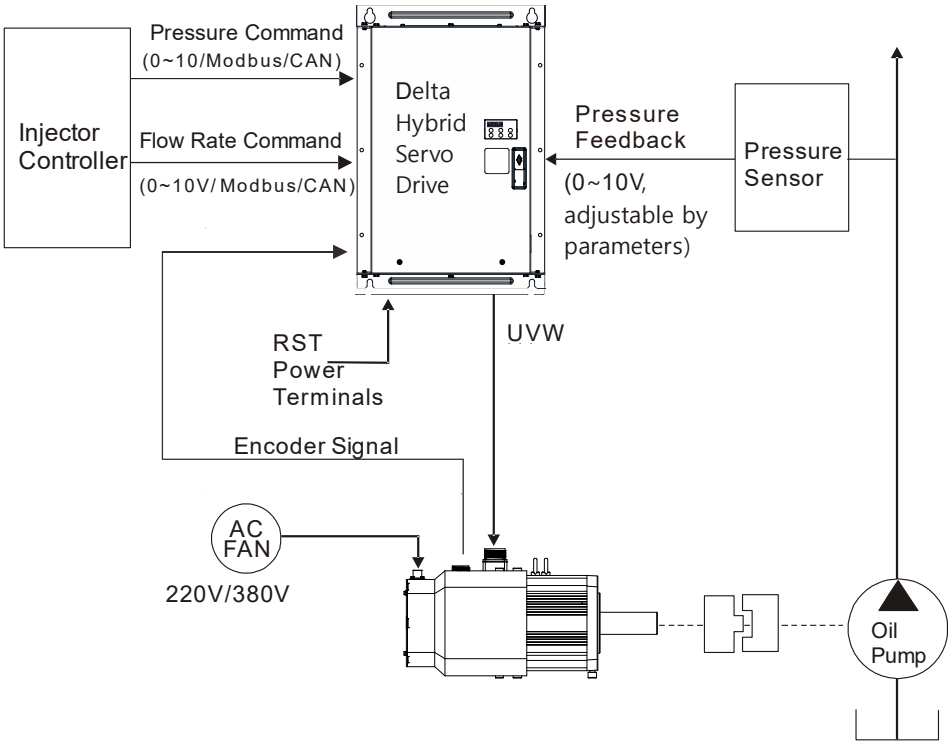

1-3-1 Selection of Hybrid Servo Drives and Motors

Due to the differences in the hydraulic system in practical applications, the following choice of drives and motors is provided as a reference.
In the following example, a flow of 64L/min and maximum holding pressure of 175Bar are used.

1. Pump Displacement per Revolution

   Based on the maximum flow of the system (L/min), the pump displacement per revolution (cc/rev) can be calculated.

   Example: If the maximum flow of the system is 64L/min and the highest rotation speed of the motor is 2000rpm, the displacement per revolution would be 64/2000*1000 = 32 cc/rev.

2. Maximum Torque of the Motor

   Based on the maximum pressure (Mpa) and pump displacement per revolution (cc/rev), the maximum torque can be calculated.

   Example: If the required maximum pressure is 17.5 Mpa and pump displacement per revolution is 125cc/rev, the maximum torque would be 17.5 x 125 x 1.3/ (2*pi) = 452 N-m, where the factor 1.3 is used to compensate the total loss in the system.

3. Rated Torque and Rated Power of the Motor

When the packing is under maximum pressure, the required torque cannot exceed 1.5 times of the motor's rated torque (depending on the data provided by the motor's manufacturer) at most or the motor would be overheated.

Example: Take the factor 1.5 as an example. The rated torque is 452 / 1.5 =310 N-m. Choose a motor with 55kW* power and 1500 RPM rated speed.
*The power of the motor is calculated by using $P(W) = T(N-m) \times \omega(rpm \times 2\pi / 60)$

4. Maximum Current of the Motor

Example: Check the parameter kt (Torque/A) in the motor's specifications fist. If kt = 3.37, the maximum current is approximately 116/3.37 = 34A at the maximum torque of 116 N-m.

5. Selection of Matched Hybrid Servo Drive

Example: Look up the heavy-duty capability for each hybrid servo drive in the product specifications.
If the holding pressure is under the maximum pressure of 17.5 Mpa by using with a pump of 32cc/rev, the required motor current would be approximately 188A.

NOTE

🕮 If there is no suitable motor that meets the specifications, a motor with a higher rated power can be used instead.

🕮 For any information about the hybrid servo drives or any assistance in detailed configuration of your company's products, please contact the manufacturer.

🕮 Before running the hybrid servo drive, verify if there's enough cooling oil in the oil circulation. You need to preheat the cooling medium such as cooling oil to prevent any condensation caused by temperature differences.

🕮 Make sure that the cooling medium stay liquidized to keep the heat dissipating system stays functional. So do follow the oil temperature limitation (10 ~ 50 ºC), (50 ºF ~ 122 ºF) to prevent overheating on cooling oil.

🕮 Heat dissipating system: The maximum working pressure cannot go over 1.5 bar at the oil inlet. Do not exchange the positions of oil inlet and oil outlet. Verify the specification of connector's pope thread (1/2" PT) to prevent damaging the pipe thread. Wrap pipe threads with teflon tape (thread seal tape).

🕮 Use wall-mounting method and follow the space requirements during the installation of the hybrid servo system

1-3-2 Selection of Pump for Hybrid Servo Motor

Select a pump with a suitable displacement based on the required flow rate and motor speed;

- If low noise is required, you can choose the screw pump or internal gear type. If a high volumetric efficiency is required, you can choose the piston pump or dual displacement piston pump.
- Comparison of Commonly Used Pump (This may vary for different pump manufacturers).

Type of Oil Pump	Volumetric Efficiency	Flow Pulsation	Rotation Speed	Noise
Internal Gear Pump	Low	Medium	Medium	Low
Piston Pump	High	Low	Low	High
Screw Pump	Medium	High	High	Medium

1-4 Product Installation

Please install the hybrid servo drive under the following environmental conditions to ensure safe use:

Environmental Condition for Operation	Ambient temperature	-10°C~ 45°C (14°F~ 113°F)
	Relative Humidity	<90% (non-condensing)
	Pressure	86 ~ 106 kPa
	Installation Altitude	<1000m
	Vibration	<20Hz: 9.80 m/s^2 (1G) max; 20~50H:5.88 m/s^2 (0.6G) max
Environmental Condition for Storage and Transportation	Ambient temperature	-20°C~ 60°C (-4°F ~ 140°F)
	Relative Humidity	<90% (non-condensing)
	Pressure	86 ~ 106 kPa
	Vibration	<20Hz: 9.80 m/s^2 (1G) max; 20 ~ 50Hz: 5.88 m/s^2 (0.6G) max
Contamination Protection Level	Level 2: Applicable to factory environment with low-to-medium contamination	

Space for Installation

Single Drive Installation:

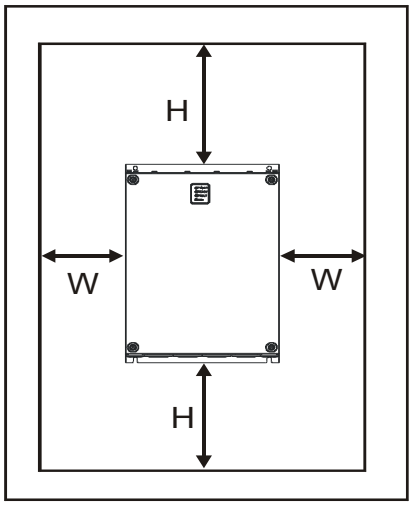

Multiple Drives: Side by Side Horizontal Installation

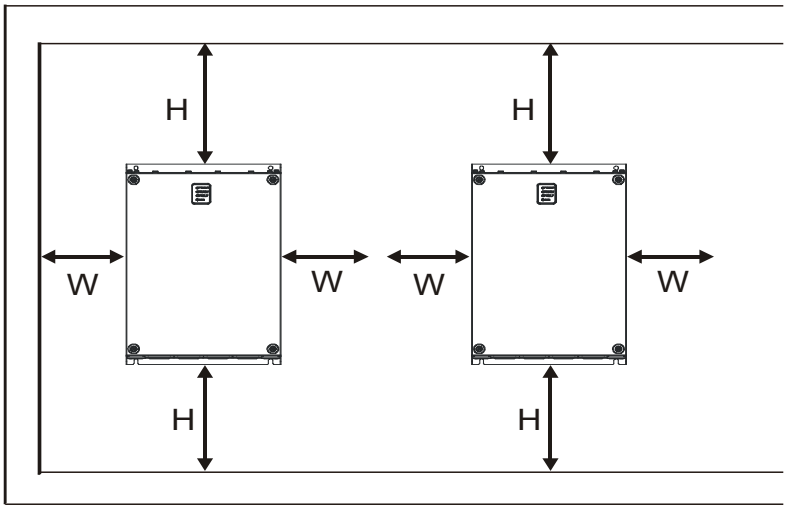

HP	W mm (inch)	H mm (inch)
7.5-20HP	75 (3)	175 (7)
25-75HP	75 (3)	200 (8)
100HP	75 (3)	250 (10)

1) Mount the hybrid servo drive vertically on a solid surface object by screws. Other directions are not allowed.
2) Because the hybrid servo drive generates heat during operation, there should be enough space for cooling airflow as shown in the figure above. Leave enough room for heat dissipation when installing. Do not install the drive beneath equipment that is not heat-resistant because the generated heat move upwards. If the drive can only be installed in a cabinet, its ambient temperature should be within regulated values. Installing the drive in a confined and insufficient cooling space would make it malfunctioned.
3) The temperature of heat sink in the drive varies with environmental temperature and its load capacity during its operation, reaching nearly the highest temperature of 90°C. Therefore, the material of the drive's backside should be able to bear such a high temperature.
4) If more than one drive are installed in one cabinet, it is recommended to install them horizontally and side by side to reduce heat generated from each other. If they can only be installed up and down, spacer plates should be put between them to decrease heat generated from lower side to upper side.
5) For information about air conditioning layout, please refer to the heat dissipation of hybrid servo drive (W) table below.

NOTE

Prevent substances like fiber particles, scraps of paper, sawdust, metal particles, and so on from entering the hybrid servo drive. The hybrid servo drive should be installed in the cabinet made from non-combustible material such as metal to prevent from fire accident.

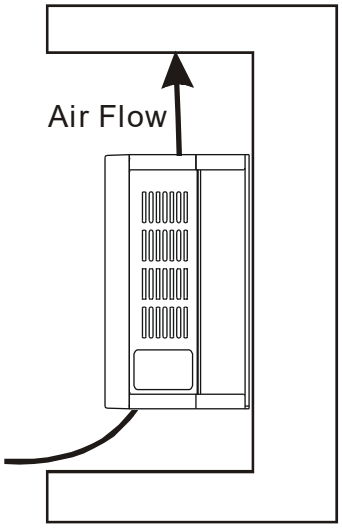

	Model	Heat Dissipation Rate (W)	Air Flow Dissipation Rate (CFM)
460V Air Cooled	VFD110VL43C-J	383.6	50
	VFD150VL43C-J	404.1	50
	VFD185VL43C-J	500.5	50
	VFD220VL43C-J	580.9	50
	VFD300VL43A-J VFD300VL43C-J	1037.8	133
	VFD370VL43A-J VFD370VL43C-J	1078.7	133
	VFD450VL43A-J, VFD450VL43C-J	1370.1	209
	VFD550VL43A-J, VFD550VL43C-J	1536.5	209

- ☑ The table above shows the required heat dissipation when installing a single drive in a confined space.
- ☑ When installing multiple drives, the required heat dissipation needs to be multiplied by the number of drives.
- ☑ The values of heat dissipation are calculated by rated voltage, rated current and default carrier wave.

Lifting

Carry only the fully assembled hybrid servo drives as shown in the following diagrams. Lift the hybrid servo drive by hooking the lift holes when driving a forklift or using a crane.

40-100HP

Step 1

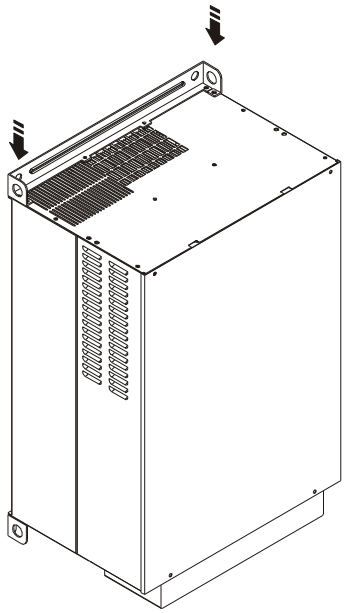

Step 2

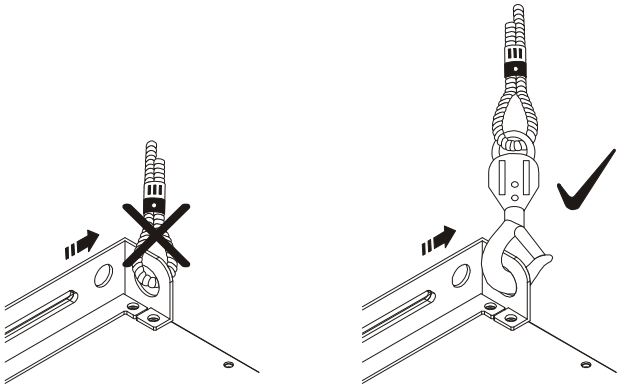

Step 3

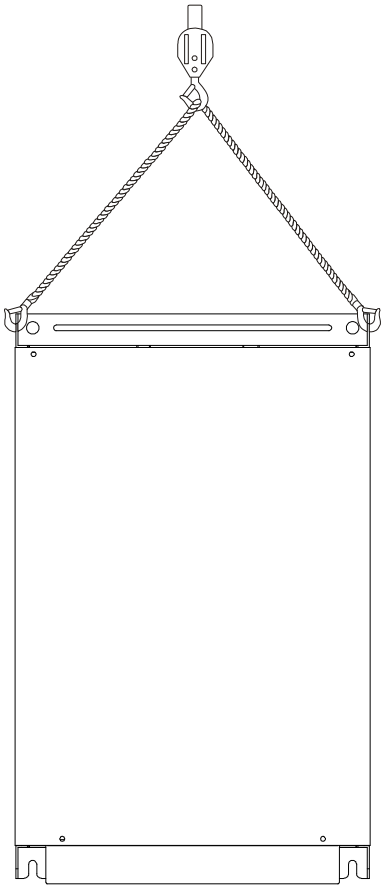

Step 4

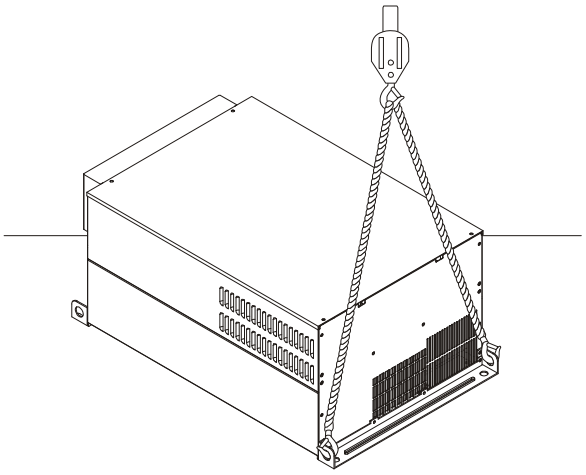

Flange Mounting

Step 1:

Please take out the 16 screws (8 screws for each top and bottom side of the drive) and remove the fixed plate 1 and fixed plate 2 as shown in the following figures.

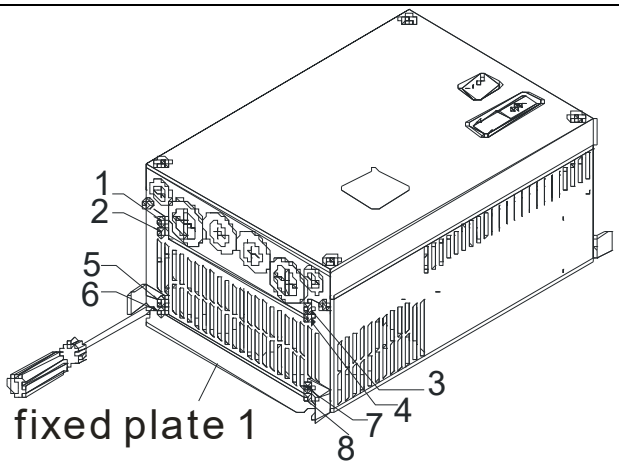

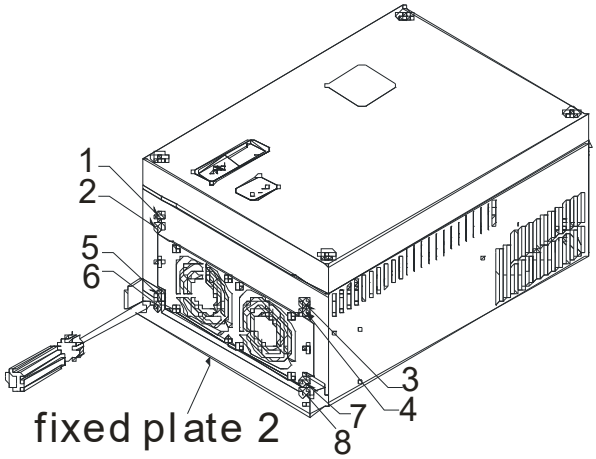

Step 2:

Place the 8 screws back in to secure the fixed plate 1 and fixed plate 2 (as shown in the following figures) with the following torque.

Frame C: 14-17kg-cm [12.2-14.8 lb-in]

Frame D: 20-25kg-cm [17.4-21.lb-in]

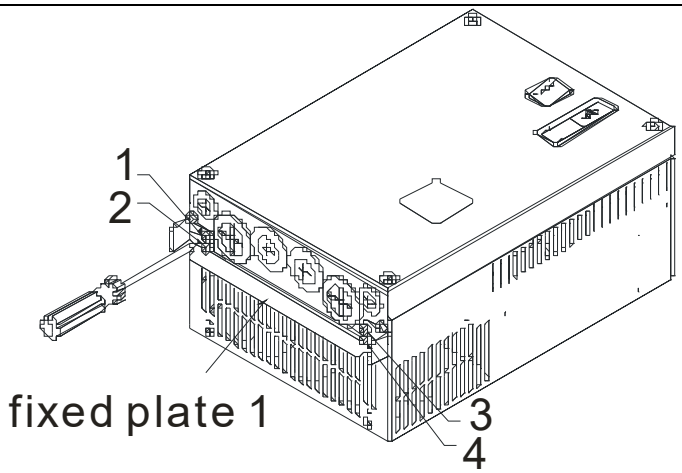

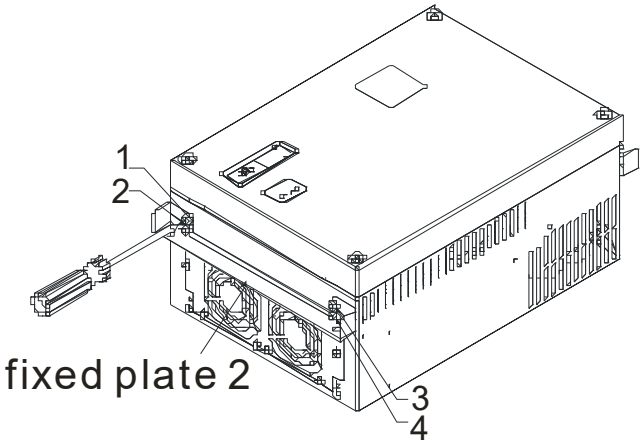

Step 3:

Note that it is not necessary to put back those 8 screws shown in the following figures to the drive. Moreover, make sure that these 2 different fixed plates are put in the correct side as shown in the figures.

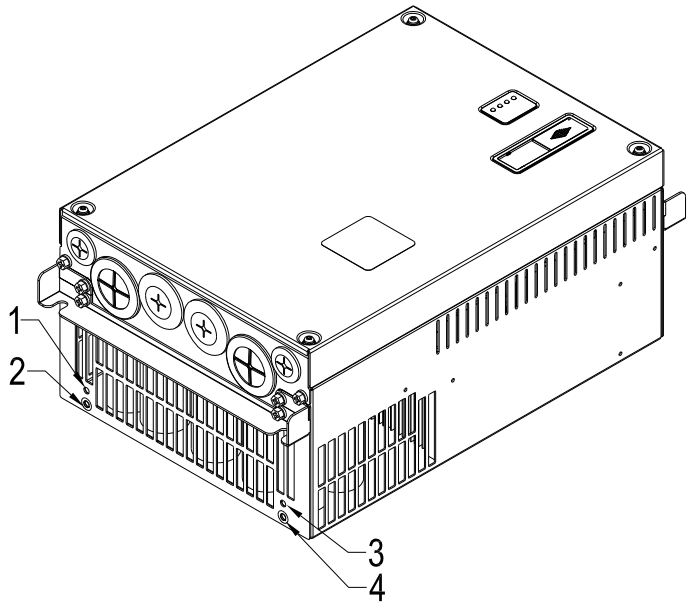

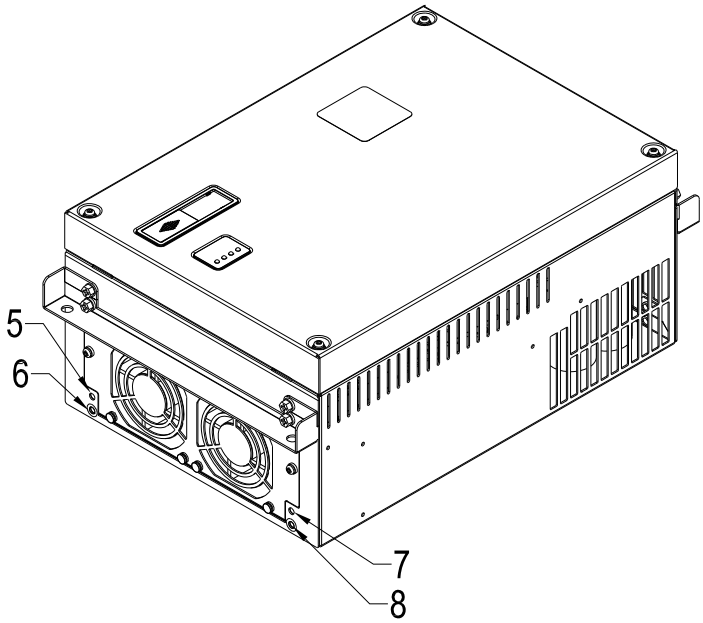

1-5 Product Dimensions

Frame C of VJ-A:
VFD110VL23A-J

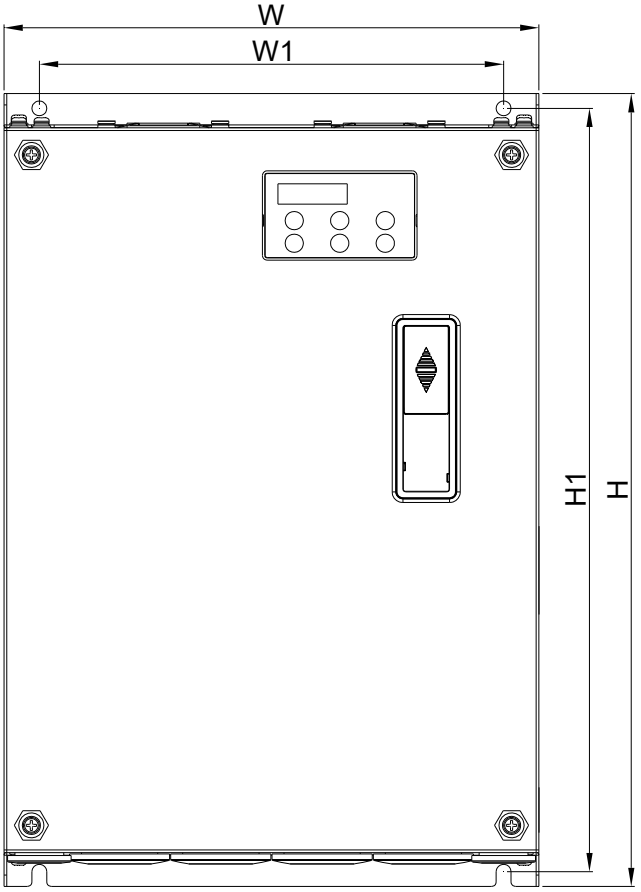

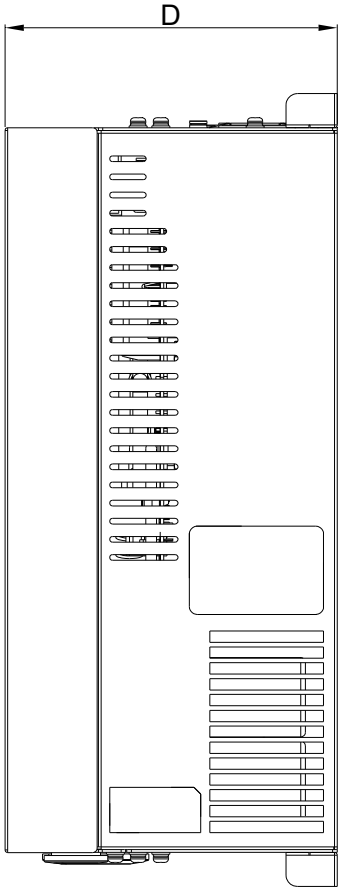

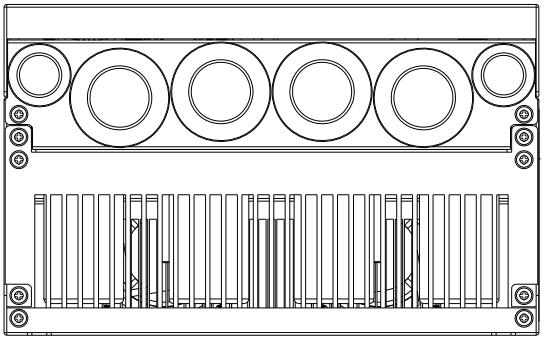

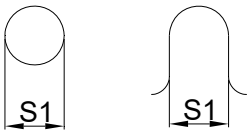

Unit: mm [inch]

Frame	W	W1	H	H1	H2	H3	D	Ø	Ø1	Ø2	Ø3
C	235 [9.25]	204 [8.03]	350 [13.78]	337 [13.27]	320 [12.60]	-	146 [5.75]	6.5 [0.26]	-	34 [1.34]	22 [0.87]

Frame D of VJ-A:
VFD150VL23A-J, VFD185VL23A-J, VFD220VL23A-J, VFD300VL43A-J, VFD370VL43A-J

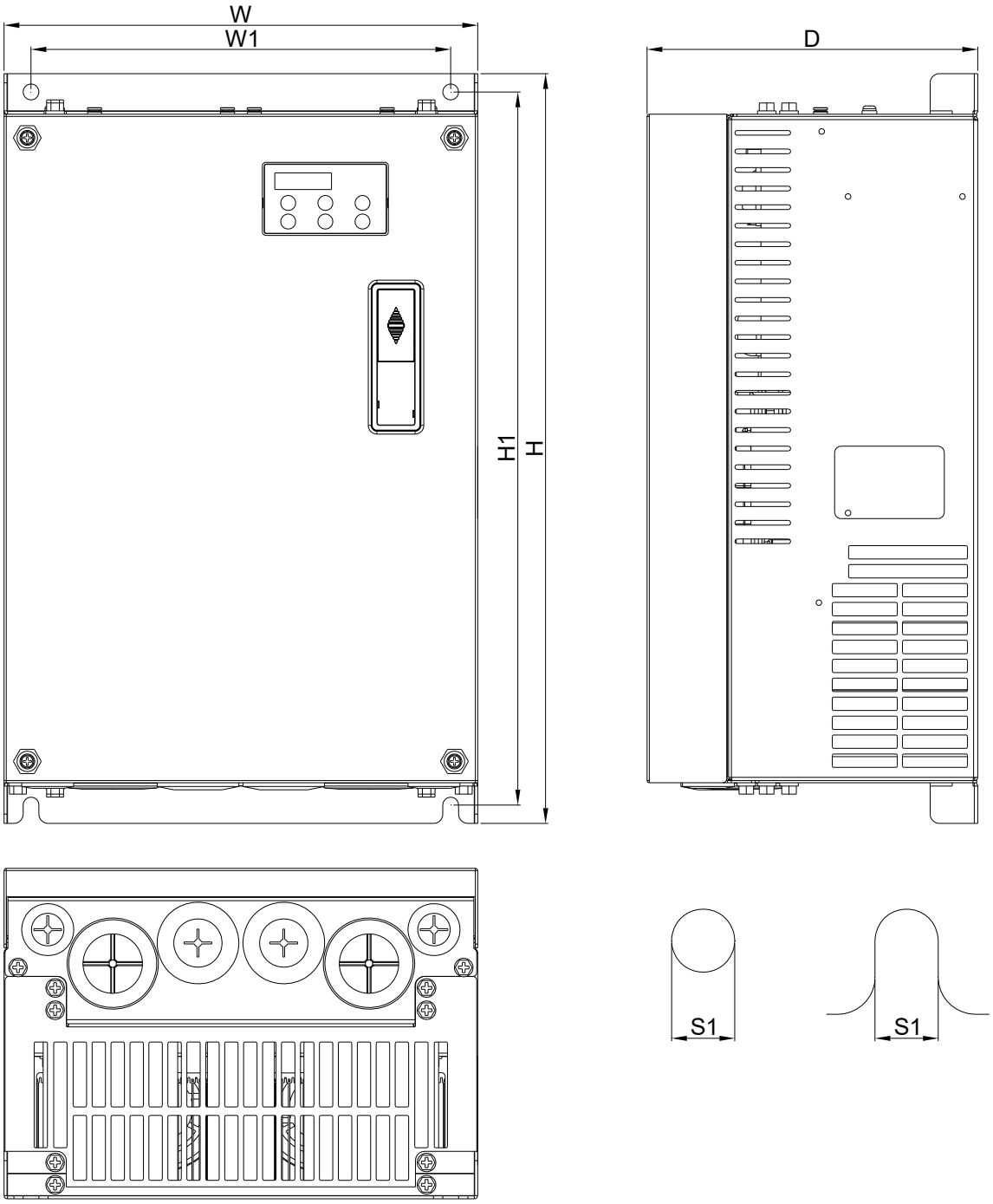

Unit: mm [inch]

Frame	W	W1	H	H1	D	S1
D	255.0 [10.04]	226.0 [8.90]	403.8 [15.90]	384.0 [15.12]	178.0 [7.01]	8.5 [0.33]

Frame C of VJ-C:
VFD110VL43C-J, VFD150VL43C-J,
VFD185VL43C-J, VFD220VL43C-J

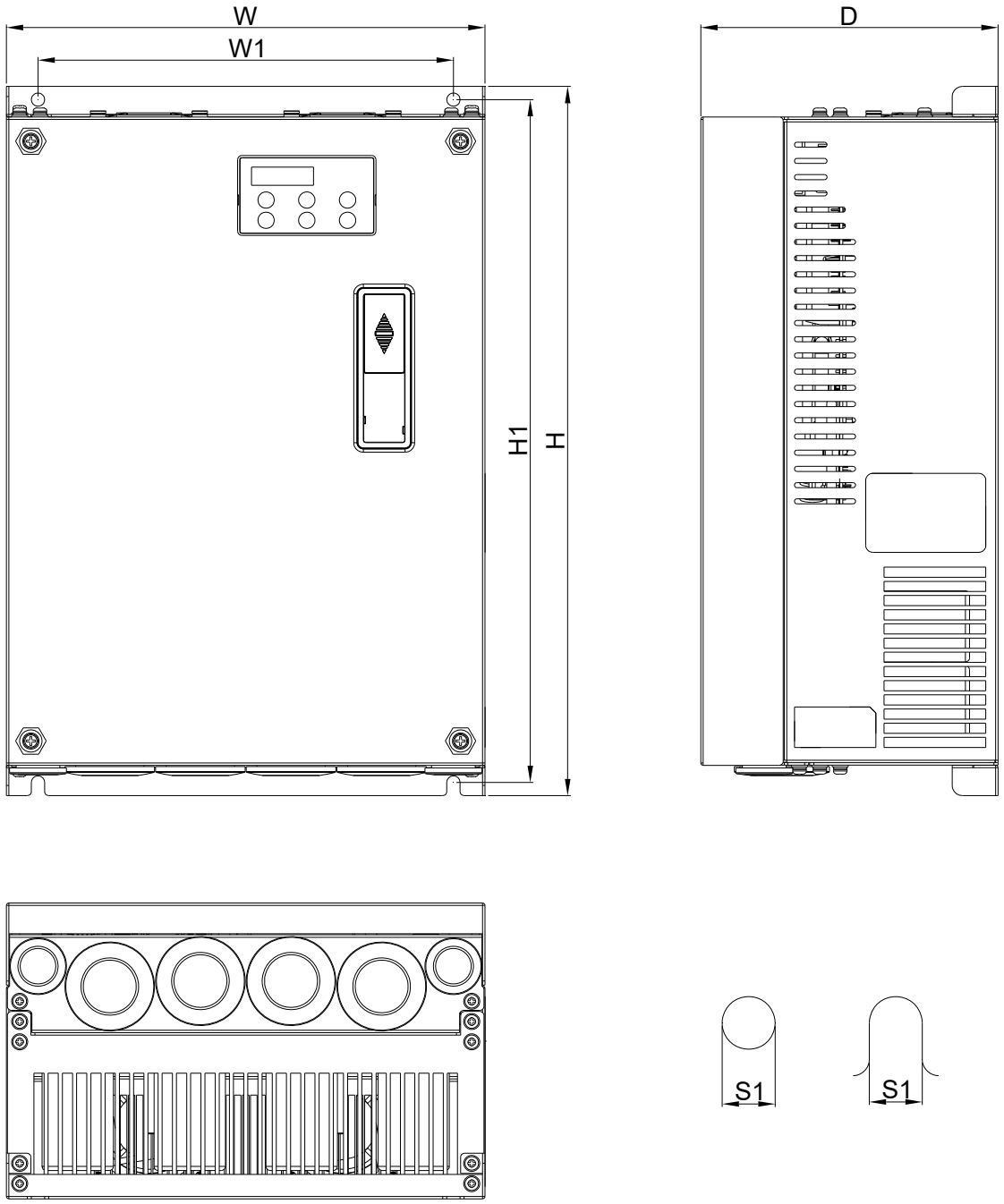

Unit: mm [inch]

Frame	W	W1	H	H1	D	S1
C	235 [9.25]	204 [8.03]	350 [13.78]	337 [13.27]	146 [5.75]	6.5 [0.26]

Frame D of VJ-C:
VFD300VL43C-J, VFD370VL43C-J

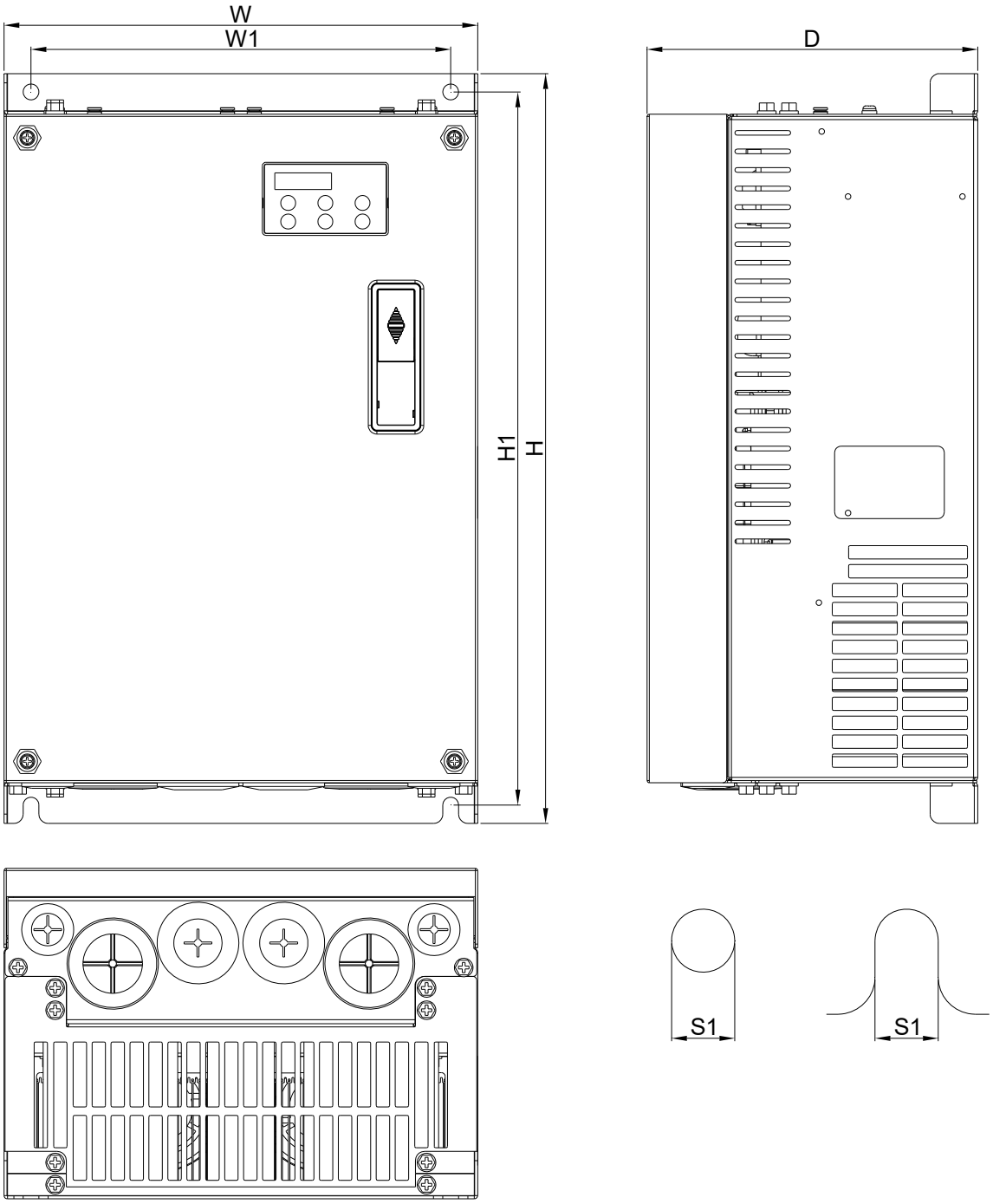

Unit: mm [inch]

Frame	W	W1	H	H1	D	S1
D	255.0 [10.04]	226.0 [8.90]	403.8 [15.90]	384.0 [15.12]	178.0 [7.01]	8.5 [0.33]

Frame E4 of VJ-C:
VFD300VL23C-J, VFD370VL23C-J,
VFD450VL43C-J, VFD550VL43C-J, VFD750VL43C-J

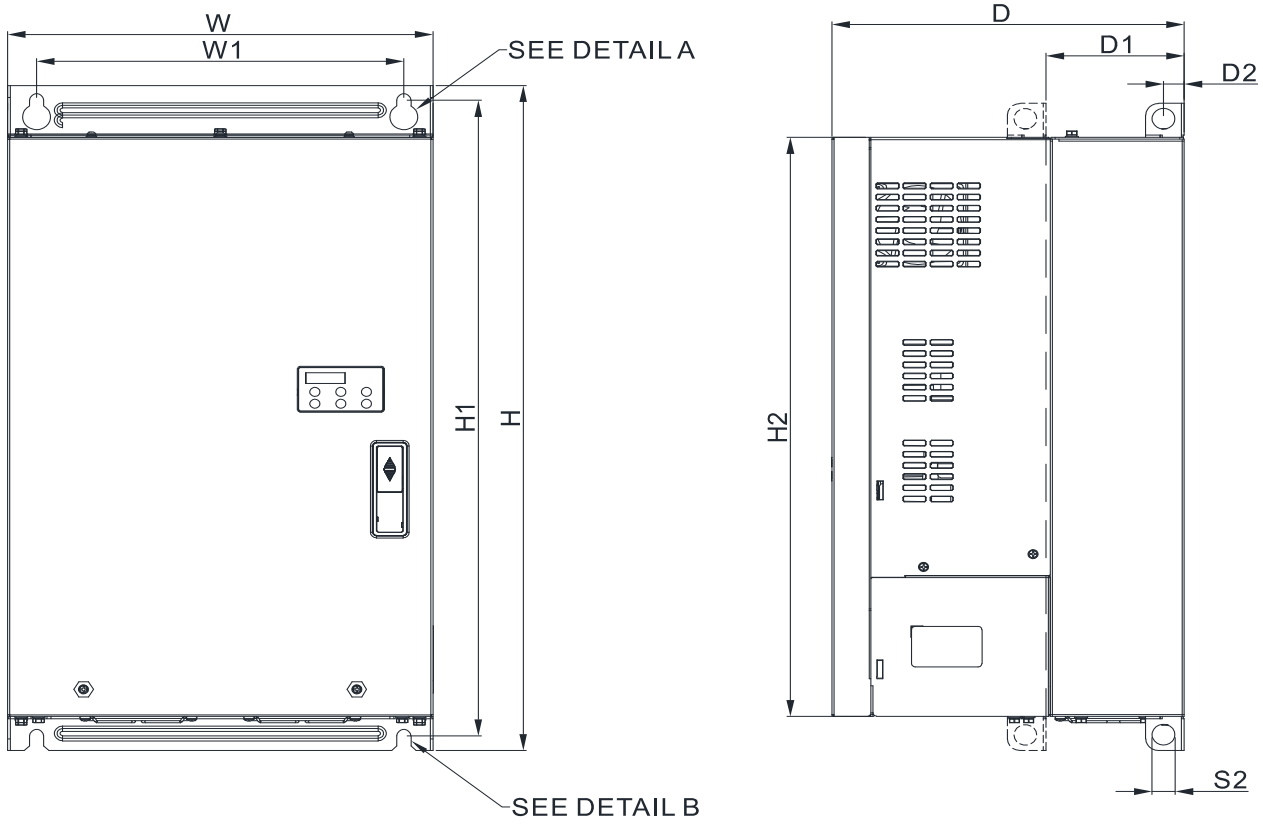

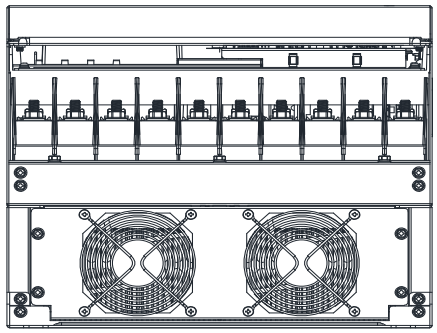

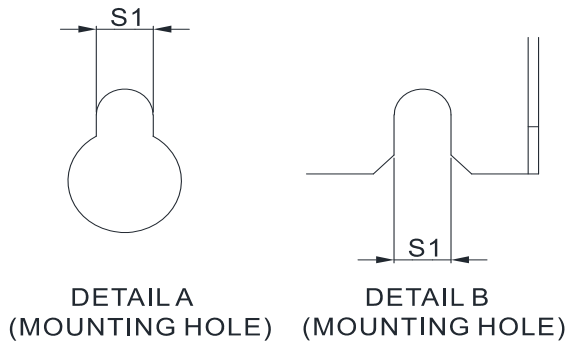

Unit: mm [inch]

Frame	W	W1	H	H1	H2	D	D1*	D2	S1	S2
E4	330.0 [12.99]	285.0 [11.22]	565.0 [22.24]	540.0 [20.67]	492.0 [19.37]	273.4 [10.76]	107.2 [4.22]	16.0 [0.63]	11.0 [0.43]	18.0 [0.71]

Frame E6 of VJ-A:
VFD450VL43A-J, VFD550VL43A-J, VFD750VL43A-J

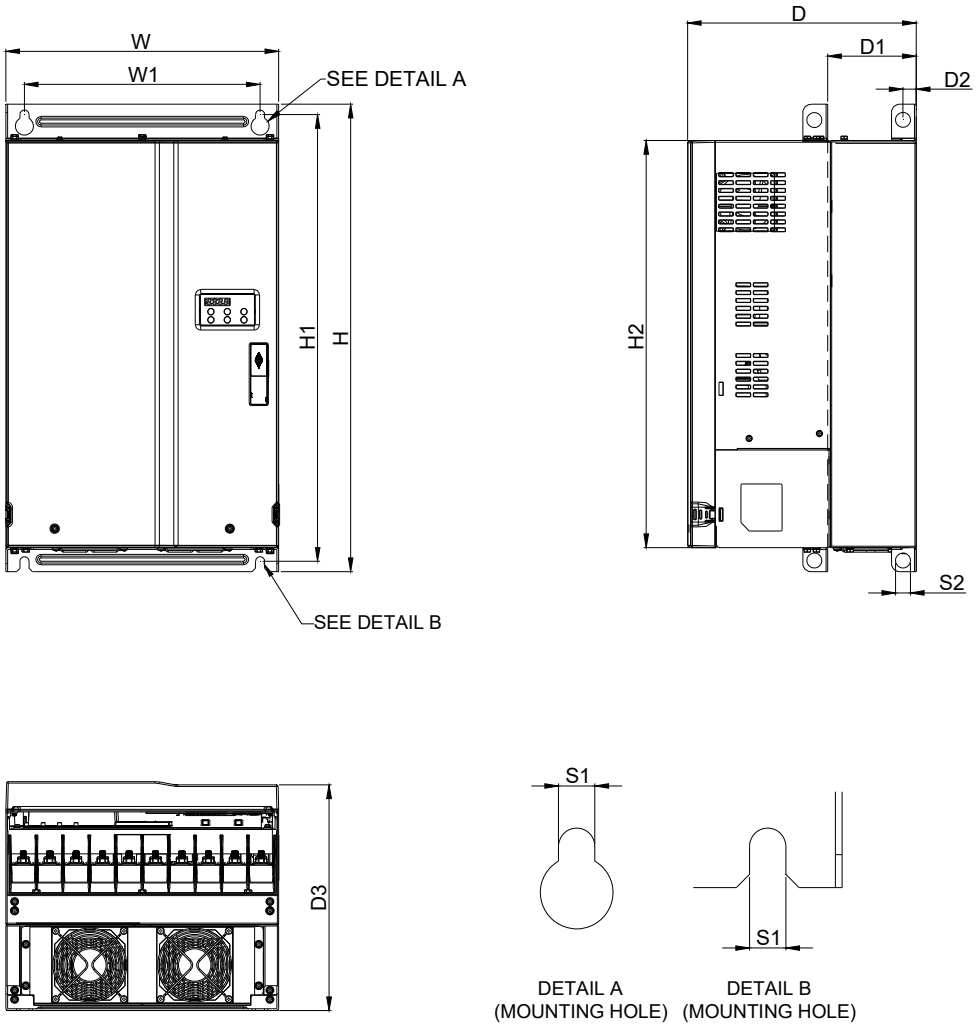

Unit: mm [inch]

Frame	W	W1	H	H1	H2	D	D1*	D2	D3	S1	S2
E6	330.0 [12.99]	285.0 [11.22]	565.0 [22.24]	540.0 [20.67]	492.0 [19.37]	276.7 [10.89]	107.2 [4.22]	16.0 [0.63]	272.7 [10.74]	11.0 [0.43]	18.0 [0.71]

*D1: This dimension is for flange mounting application reference.

Chapter 2 Wiring

1-1 Description of Wiring

1-2 Description of Terminals on Main Circuit

1-3 Description of Terminals on Control Circuit

After removing the front cover, check if the power and control terminals are clear. Be sure to observe the following precautions when wiring.

☑ Make sure that power is only applied to the R/L1, S/L2, and T/L3 terminals. Failure to comply may result in damage to the equipments. The voltage and current should lie within the range as indicated on the nameplate

☑ All the units must be grounded directly to a common ground terminal to prevent lightning strike or electric shock.

☑ Please make sure to fasten the screw of the main circuit terminals to prevent sparks which is made by the loose screws due to vibration

DANGER	☑ It is crucial to turn off the hybrid servo drive power before any wiring installation are made. A charge may remain in the DC bus capacitors with hazardous voltages even if the power has been turned off therefore it is suggested for users to measure the remaining voltage before wiring. For your personnel safety, please do not perform any wiring before the voltage drops to a safe level < 25 V_{DC}. Wiring installation with remanding voltage condition may cause sparks and short circuit. ☑ Only qualified personnel familiar with hybrid servo drives is allowed to perform installation, wiring and commissioning. Make sure the power is turned off before wiring to prevent electric shock.
CAUTION	☑ Make sure that power is only applied to the R/L1, S/L2, and T/L3 terminals. Failure to comply may result in damage to the equipment. The voltage and current should lie within the range as indicated on the nameplate. ☑ Check following items after finishing the wiring: 1. Are all connections correct? 2. No loose wires? 3. No short-circuits between terminals or to ground? ☑ The wiring of main circuit and control circuit should be separated to prevent erroneous actions. ☑ Please use shield wire for the control wiring and not to expose the peeled-off net in front

of the terminal.

- ☑ Please use the shield wire or tube for the power wiring and ground the two ends of the shield wire or tube.
- ☑ Damaged insulation of wiring may cause personal injury or damage to circuits/equipment if it comes in contact with high voltage.
- ☑ The AC motor drive, motor and wiring may cause interference. To prevent the equipment damage, please take care of the erroneous actions of the surrounding sensors and the equipment.
- ☑ When the hybrid servo drive output terminals U/T1, V/T2, and W/T3 are connected to the motor terminals U/T1, V/T2, and W/T3, respectively. To permanently reverse the direction of motor rotation, switch over any of the two motor leads.
- ☑ With long motor cables, high capacitive switching current peaks can cause over-current, high leakage current or lower current readout accuracy. For longer motor cables, use an AC output reactor.
- ☑ VFD-VJ series doesn't have built-in brake resistors, but brake resistor can be installed for those occasions that use higher load inertia or frequent start/stop. Refer to Appendix A-1 for details.
- ☑ Make sure that the leads are connected correctly and the hybrid servo drive is properly grounded to reduce noise and for safety.
- ☑ To prevent lighting stroke and electric shock, use ground leads that comply with local regulations. Keep them as short and thick as possible and have them properly connected to the ground terminal on the hybrid servo drive.
- ☑ Connect the peripheral braid sleeve of the pressure sensor to the grounding terminal PE.
- ☑ Multiple VFD-VJ units can be installed in one location. All the units should be grounded directly to a common ground terminal, as shown in the figure below.

Ensure there are no ground loops.

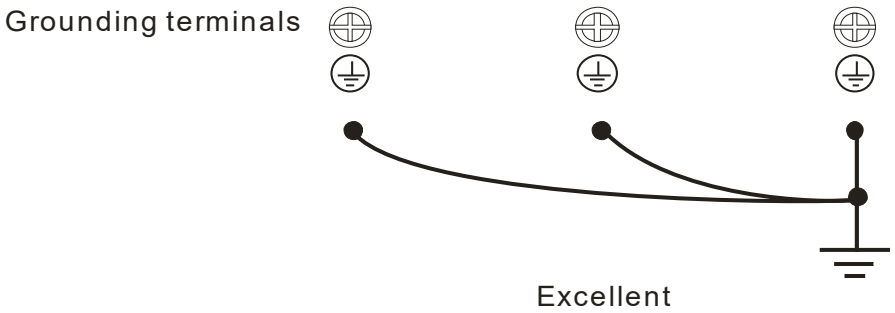

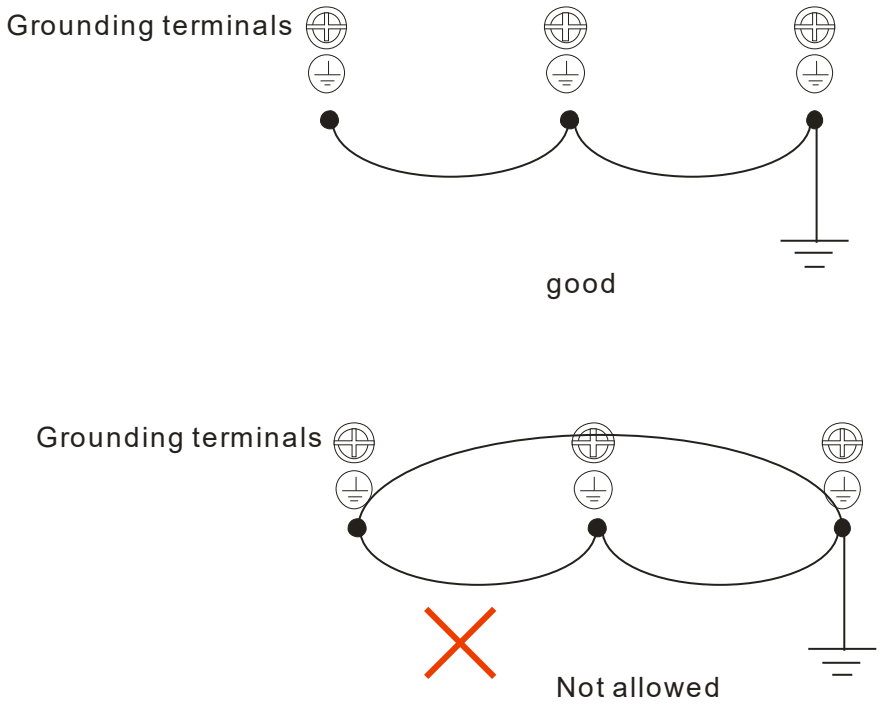
Grounding terminals
good
Grounding terminals
Not allowed

2-1 Description of Wiring

Users must connect wires according to the circuit diagrams on the following pages.

Standard wiring diagram of the VFD-VJ hybrid servo drive in factory

Wiring Diagram and Corresponding Models:

VFD450VL43A-J, VFD550VL43A-J, VFD750VL43A-J, VFD300VL23C-J, VFD370VL23C-J, VFD450VL43C-J, VFD550VL43C-J, VFD750VL43C-J

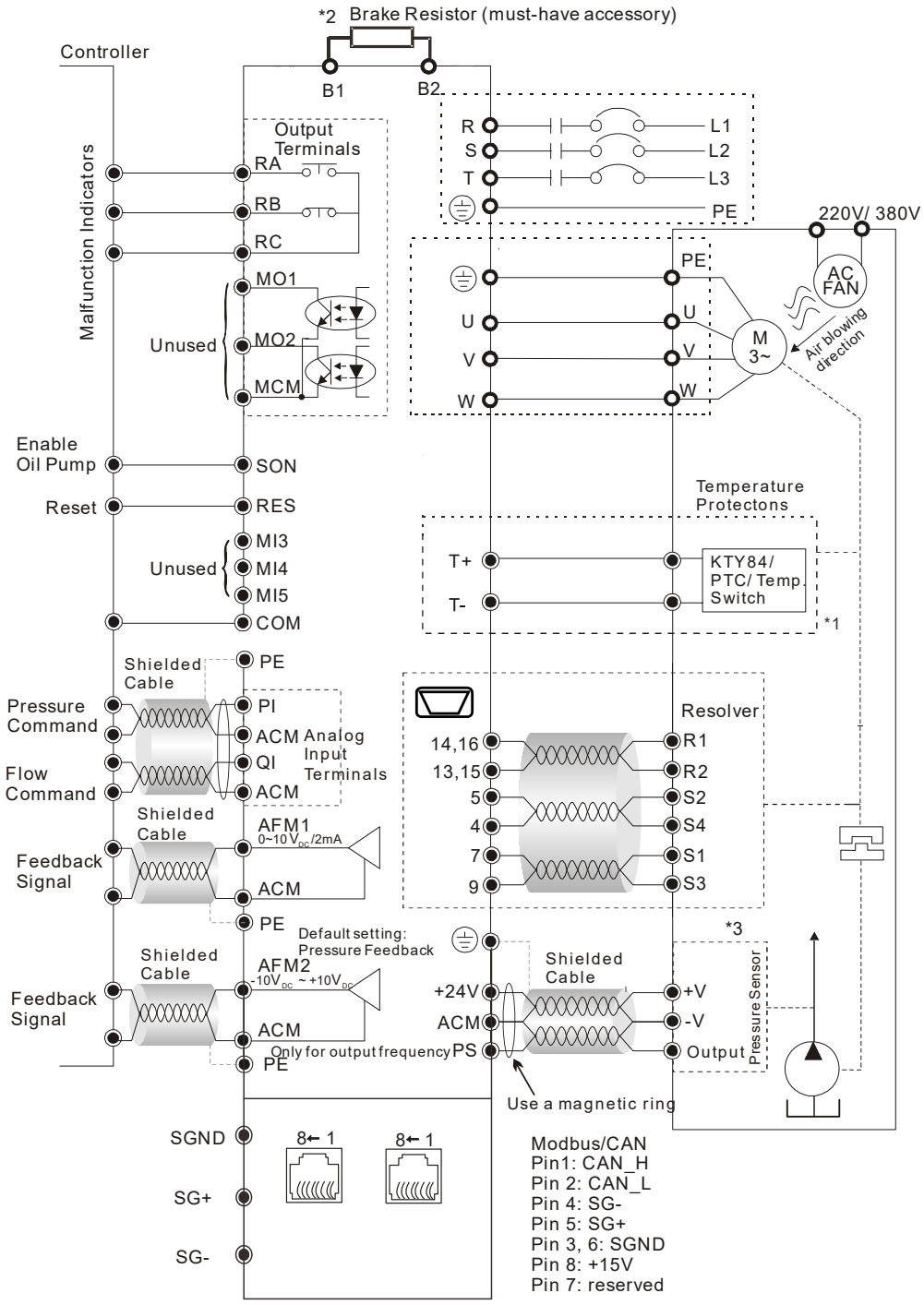

Wiring Diagram and Corresponding Models:

VFD110VL23A-J, VFD150VL23A-J, VFD185VL23A-J, VFD220VL23A-J, VFD-300VL43A-J, VFD370VL43A-J, VFD110VL43C-J, VFD150VL43C-J, VFD185VL43C-J, VFD220VL43C-J, VFD300VL43C-J, VFD370VL43C-J

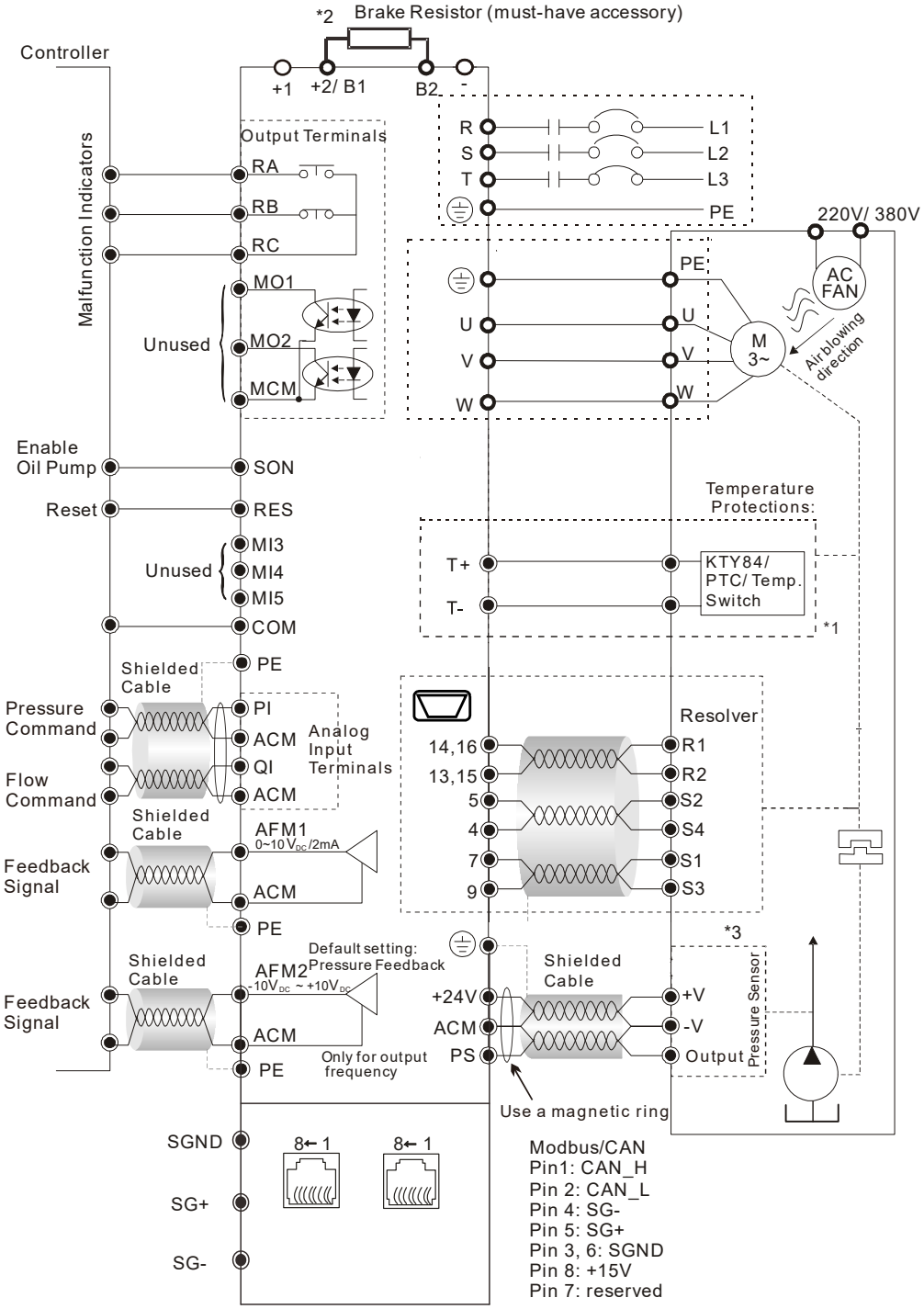

***1** Verify the polarity before using KTY84

***2**

For 460V, 37kW (included) models and below: (with built-in brake unit) 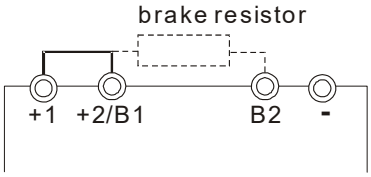 	For 230V_30kW, 230V_37kW and 460V_45kW (included) models and above: (with built-in brake unit) 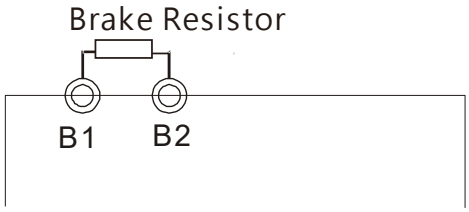

***3** The peripheral braid sleeve of the pressure sensors needs to shield completely the internal signal wires. Make the signal wires which are not shielded by the braid sleeve as short as possible. Also bring signal wires as close to the control terminals as possible. Connect the peripheral braid sleeve to PE grounding terminal. If the impulse noise or any other noise is too strong, connect the signal wire to the ACM terminal to eliminate noise.

Multi-pump Operation Mode

Confluence Mode

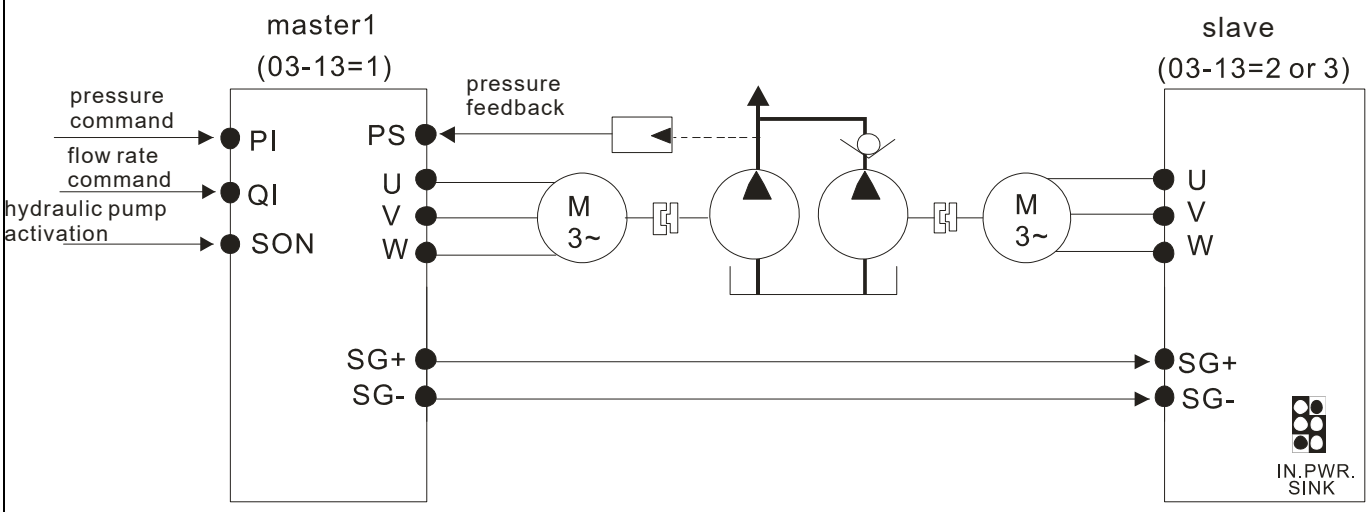

Confluence-Diversion Mode

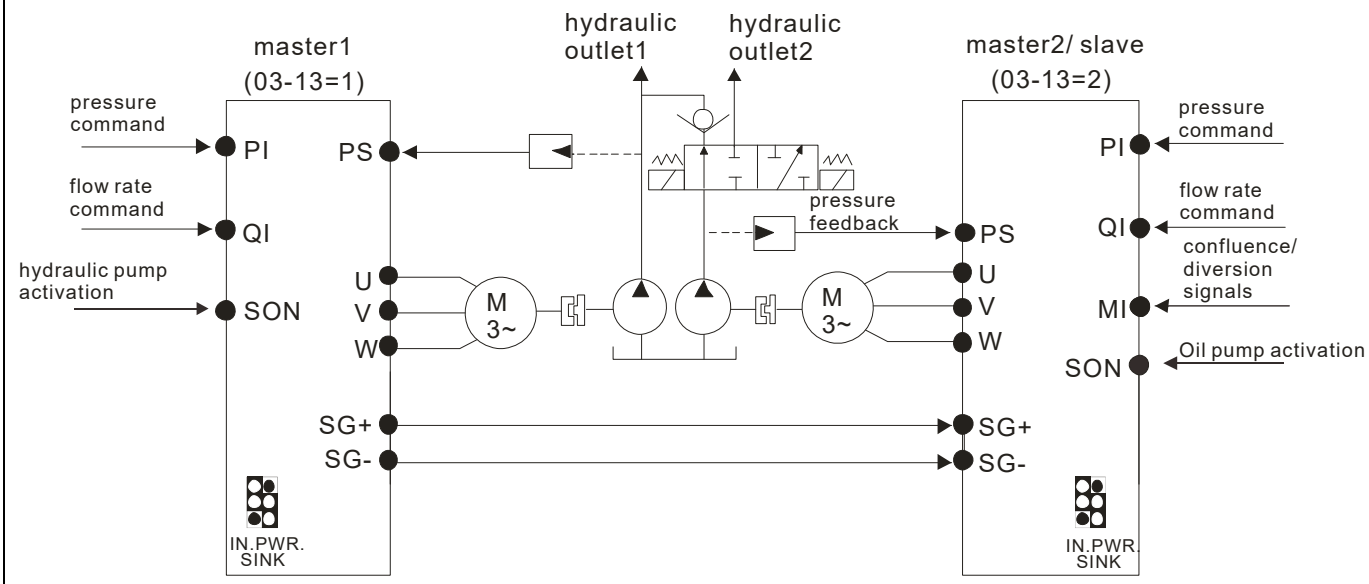

NOTE:

1) If you need to release the pressure by running reversely at the slave pump, you don't need to install a one-way valve at slave pump's oil outlet.
2) At the confluence, the slave runs under speed mode. The operation command and the speed command of the slave are sent from the master through RS485.
3) At the diversion, both hybrid servo drives run under pressure mode. The operation command, the pressure command and the flow command are all sent from the master.

When the signals are confluent, the communication will be a short circuit.
When the signals are diversional, the communication becomes an open circuit.

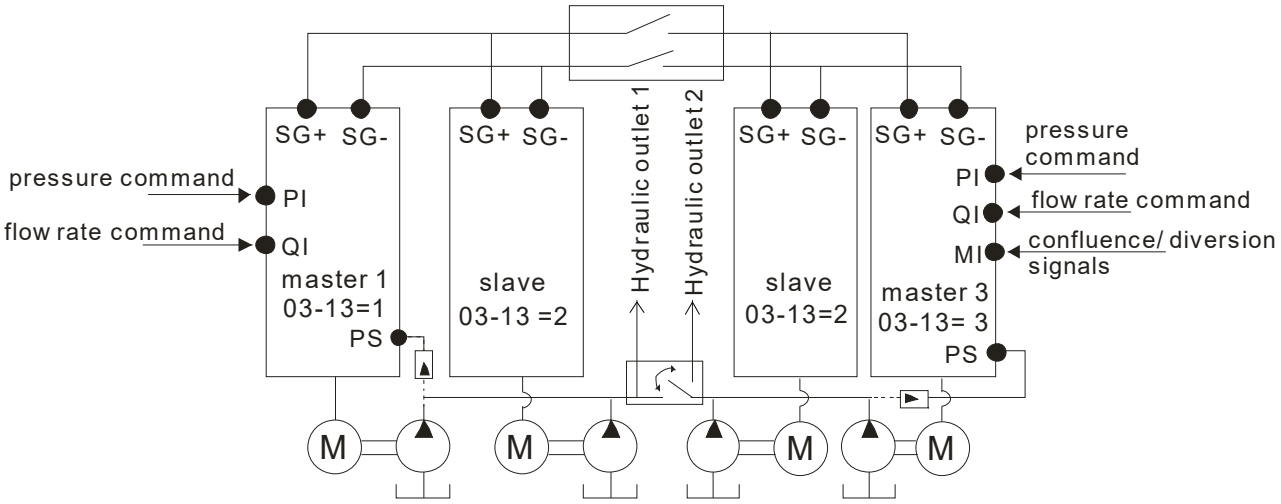

2-1-1 Grounding Short-Circuit Plate Description (RFI Switch)

RFI switch

The drive contains Varistors / MOVs that are connected from phase to phase and from phase to ground to protect the drive against mains surges or voltage spikes.

Because the Varistors/MOVs from phase to ground are connected to ground with the RFI switch, removing the RFI jumper disables the protection.

The RFI switch also connects the filter capacitors to ground from a return path for high frequency noise to isolate the noise from contaminating the mains power. Removing the RFI switch strongly reduces this protection.

Isolating main power from ground

When the power distribution system of the drive is a floating ground system (IT Systems) or a TT system (Terre-Terre en français, or earth-earth in English), you must remove the RFI switch. Removing the RFI switch disconnects the internal capacitors from ground to avoid damaging the internal circuits and to reduce the ground leakage current (in accordance with IEC61800-3 regulation). The RFI switch is shown in the images below.

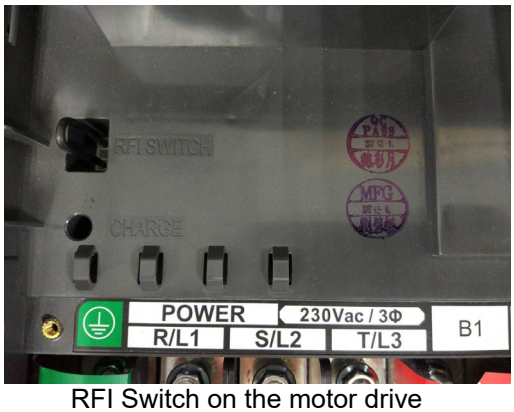

RFI Switch on the motor drive

Removable RFI Switch

NOTE:

- Do NOT remove the RFI switch while the power is on.
- Before you remove the RFI switch, make sure that the main power has been cut off.
- Removing the RFI switch will cut off the capacitor's electrical conductivity. Once the surge voltage is higher than 1,000V, there may be a gap discharge. Efficient galvanic isolation is no longer guaranteed if removing the RFI switch. Then all the input and output terminals are low voltage terminals which have basic isolation. Removing the RFI switch also reduces the compliance with the EMC specification.
- Do not remove the RFI switch while conducting high voltage tests. When conducting a high voltage test to the entire facility, you must disconnect the mains power and the motor if the leakage current is too high
- Do not switch off the RFI switch when the main power is a grounded power system. To prevent motor drive damage, the RFI switch shall be removed if the motor drive is installed on an ungrounded power system, a high resistance-grounded (over 30 ohms) power system, or a corner grounded TN system.

Floating Ground System (IT Systems)

A floating ground system is also called IT system, ungrounded system, or high impedance/resistance (greater than 30Ω) grounding system.

- Disconnect the ground cable from the internal EMC filter.
- In situations where EMC is required, check whether there is excess electromagnetic radiation affecting nearby low-voltage circuits. In some situations, the adapter and cable naturally provide enough suppression. If in doubt, install an extra electrostatic shielded cable on the power supply side between the main circuit and the control terminals to increase security.

Asymmetric Ground System (Corner Grounded TN Systems)

Caution: Do not remove the RFI switch while the input terminal of the hybrid servo drive carries power. In the following four situations, the RFI switch must be removed. This is to prevent the system from grounding through the RFI capacitor and damaging the hybrid servo drive

Remove the RFI switch	
1. Corner-Grounded Delta System) 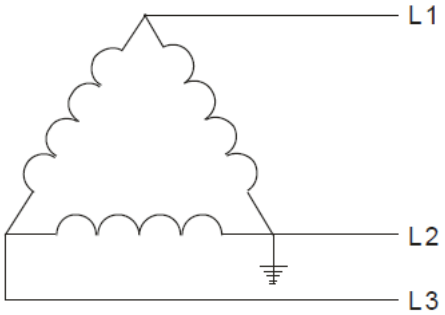	2. Center-Tap Grounded Delta System) 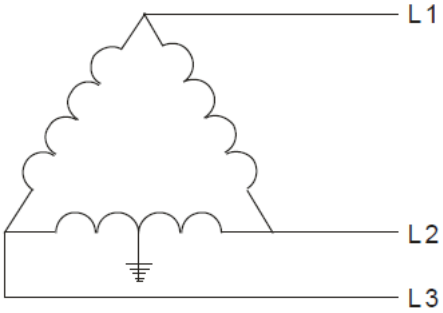
3. Single Phase with Ground) 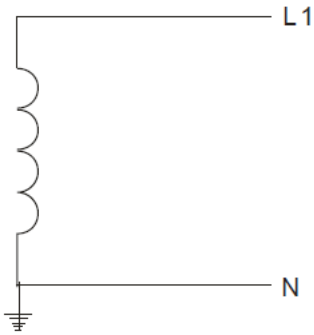	4. Delta System without Ground) 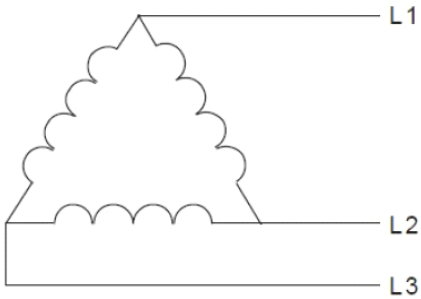

Keep the RFI switch	
Internal grounding through RFI capacitor, which reduces electromagnetic radiation. In a situation with higher requirements for electromagnetic compatibility, and using a symmetrical grounding power system, an EMC filter can be installed. As a reference, the diagram on the right is a symmetrical grounding power system.	Y connection (Star Connection) with stable neutral grounding point. 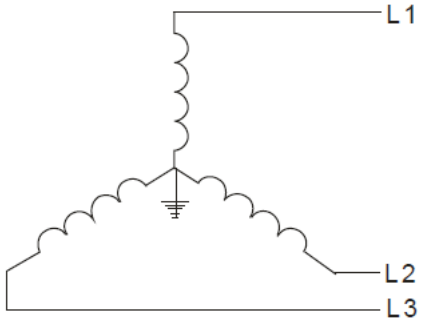

2-2 Description of Terminals on Main Circuit

Items	Explanations
Power supply	Please follow the specific power supply requirements shown in Chapter 01.
Fuse/NFB	There may be an inrush current during power up. Please check the chart of Appendix A-2 and select the correct fuse with rated current. Use of a NFB is optional.
Magnetic contactor	Please do not use a Magnetic contactor as the I/O switch of the AC motor drive, as it will reduce the operating life cycle of the AC drive. If you still need to run / stop AC drives by switching ON/ OFF the magnetic contactor, you can do so only ONCE per hour.
Input AC Line Reactor	Used to improve the input power factor, to reduce harmonics and provide protection from AC line disturbances (surges, switching spikes, short interruptions, etc.). AC line reactor should be installed when the power supply capacity is 500kVA or more and exceeds 6 times the inverter capacity, or the mains wiring distance ≤ 10m. We suggest to install the input reactor close to the hybrid motor drive. See Appendix A for more details.
Zero-phase Reactor (Ferrite Core Common Choke)	Zero phase reactors are used to reduce radio noise especially when audio equipment is installed near the inverter. Effective for noise reduction on both the input and output sides. Attenuation quality is good for a wide range from AM band to 10MHz. Appendix A specifies the zero phase reactor. (RF220X00A)
EMI filter	To reduce electromagnetic interference, please refer to Appendix A for more details.
Brake Resistor	Used to reduce the deceleration time of the motor. Please refer to the chart in Appendix A for specific Brake Resistors.
Output AC Line Reactor	Motor surge voltage amplitude depends on motor cable length. For applications with long motor cable (>20m), it is necessary to install a reactor at the inverter output side.

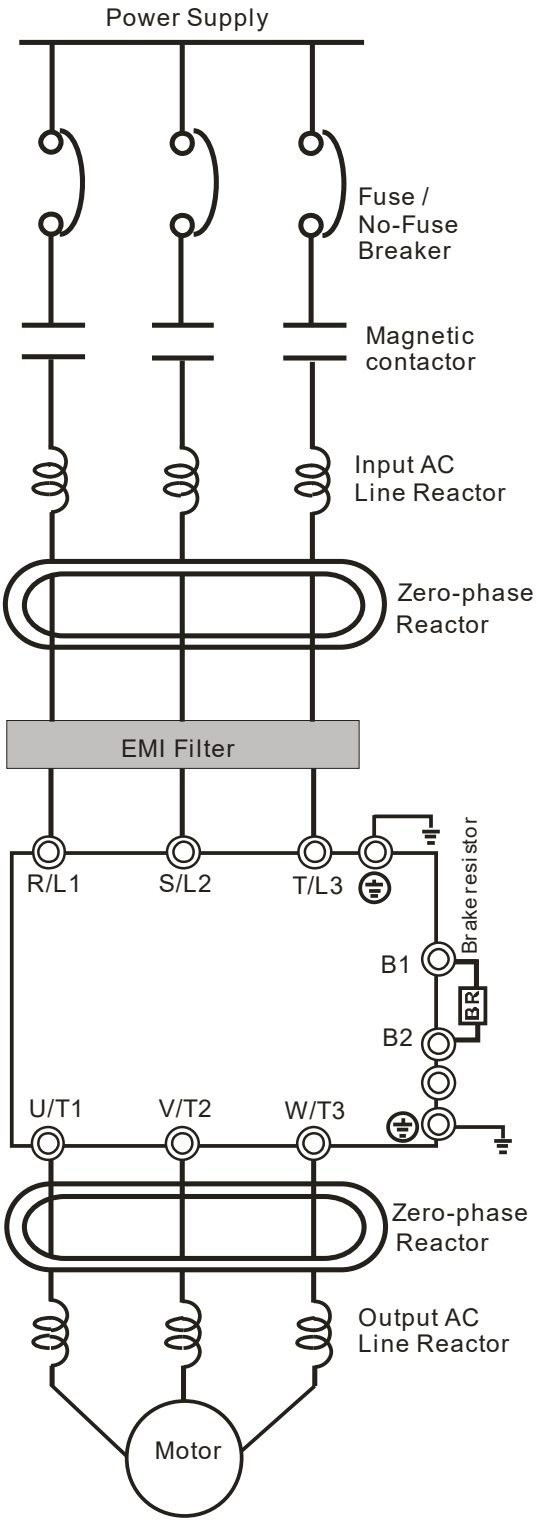

Motor

Terminal Identification	Description
R/L1, S/L2, T/L3	AC line input terminals 3-phase
U/T1, V/T2, W/T3	Output terminals of the hybrid servo drive that are connected to the motor
+1, +2/B1	Terminals to connect to DC reactor to improve the power factor. Remove the RFI switch before connecting a DC reactor to a hybrid servo drive. (DC reactor is built in for models ≧ 45KW)
+2/b1, B2	Terminals to connect to brake resistor (optional, see Appendix A-1 for more information)
⏚	Grounding Terminal, please comply with local regulations.

CAUTION

Power supply input terminals for the main circuit:

- ☑ Do not connect 3-phase model to one-phase power. R/L1, S/L2 and T/L3 has no phase-sequence requirement, it can be used upon random selection.
- ☑ Connect these terminals (R/L1, S/L2, T/L3) via a non-fuse breaker or an earth leakage breaker to the three-phase AC power for circuit protection. It is unnecessary to consider phase-sequence.
- ☑ It is recommend adding a magnetic contactor (MC) to the power input wiring to cut off power quickly and reduce malfunction when activating the protection function of the AC motor drive. Both ends of the MC should have an R-C surge absorber.
- ☑ Fasten the screws in the main circuit terminal to prevent sparks condition made by the loose screws due to vibration.
- ☑ Please use voltage and current within the specification. Please refer to Chapter 1 for the specifications.
- ☑ When using a general GFCI (Ground Fault Circuit Interrupter), select a current sensor with sensitivity of 200mA or above and not less than 0.1-second operation time to avoid nuisance tripping.
- ☑ Please use the shield wire or tube for the power wiring and ground the two ends of the shield wire or tube.

Output terminals for the main circuit:

- ☑ When it needs to install the filter at the output side of terminals U/T1, V/T2, W/T3 on the hybrid servo drive. Please use inductance filter. Do not use phase-compensation capacitors or L-C (Inductance-Capacitance) or R-C (Resistance-Capacitance), unless approved by Delta.
- ☑ DO NOT connect phase-compensation capacitors or surge absorbers at the output terminals of hybrid servo drives.

The terminals of the DC reactor [＋1, ＋2],

- ☑ This is the terminals used to connect the DC reactor to improve the power factor. For the factory setting, it connects the short-circuit object. Please remove this

	short-circuit object before connecting to the DC reactor. 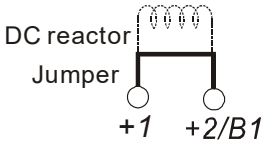 ☑ For those models without built-in brake resistor, please connect external brake unit and brake resistor (both of them are optional) to increase brake torque. ☑ DO NOT connect [B2] or [-] to [+2/B1] directly to prevent drive damage.

Specifications of the Main Circuit Terminals

VJ-A and VJ-C Air Cooled

Frame C

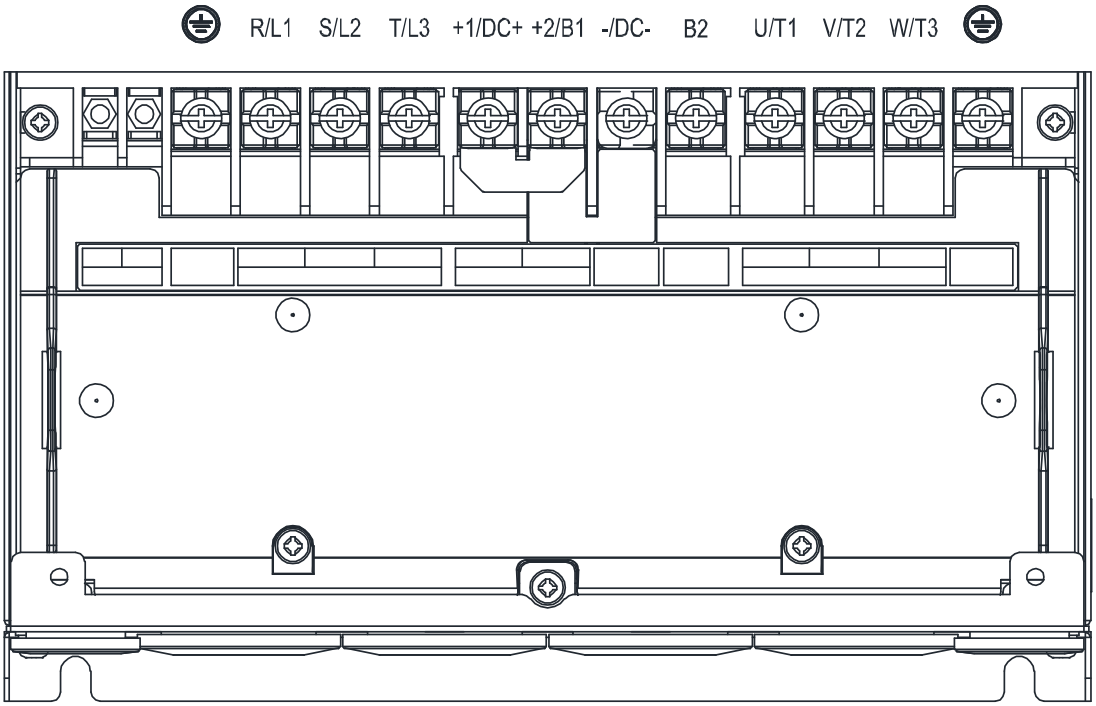

	Main Circuit Terminals: R/L1, S/L2, T/L3, U/T1, V/T2, W/T3, DC+, DC-, B1, B2			Grounding Terminal: ⏚		
Models	Max. Wire Gauge	Mini. Wire Gauge	Screw Size and Torque Force (± 10%)	Max. Wire Gauge	Mini. Wire Gauge	Screw Size and Torque Force (± 10%)
VFD-110VL23A-J	16 mm^2 (6 AWG)	16 mm^2 (6 AWG)	M5 30 kg-cm (26.0 lb-in) (2.94 Nm)	16 mm^2 (6 AWG)	16 mm^2 (6 AWG)	M5 30 kg-cm (26.0 lb-in.) (2.94 Nm)
VFD110VL43C-J		10 mm^2 (8 AWG)		10 mm^2 (8 AWG)	10 mm^2 (8 AWG)	
VFD150VL43C-J		10 mm^2 (8 AWG)		10 mm^2 (8 AWG)	10 mm^2 (8 AWG)	
VFD185VL43C-J		16 mm^2 (6 AWG)		16 mm^2 (6 AWG)	16 mm^2 (6 AWG)	
VFD220VL43C-J		16 mm^2 (6 AWG)		16 mm^2 (6 AWG)	16 mm^2 (6 AWG)	

NOTE:

1. If you install at Ta 45°C environment, select copper wire with voltage rating of 600V and temperature resistance of 75°C or 90°C
2. If you install at Ta 45°C above environment, select copper wire with voltage rating of 600V and temperature resistance of 90°C or above.
3. For UL installation compliance, use copper wires when installing. The wire gauge is based on a temperature resistance of 75°C, in accordance with UL requirements and recommendations.
4. Do not reduce the wire gauge when using higher temperature wire.

Terminal Block Specification:

Unit: mm

Frame Size	AWG	VENDOR	P/N	A (max.)	B (max.)	C (min.)	D (max.)	d2 (min.)	E (min.)	F (min.)	W (max.)	t (max.)
C	8	K.S.T.	RNBS8-5	25.0	6.0	7.0	9.0	5.2	13.0	7.0	12.5	3.0
	6	K.S.T.	RNBS14-5									

- The following additional terminals are required when wiring. The additional terminal dimension should comply with Figure 1 below.
- After crimping the wire to the ring lug (must be UL approved), UL and CSA approved R/C (YDPU2), and install heat shrink tubing rated at a minimum of 600 V_{AC} insulation over the live part. Refer to Figure 2 below.

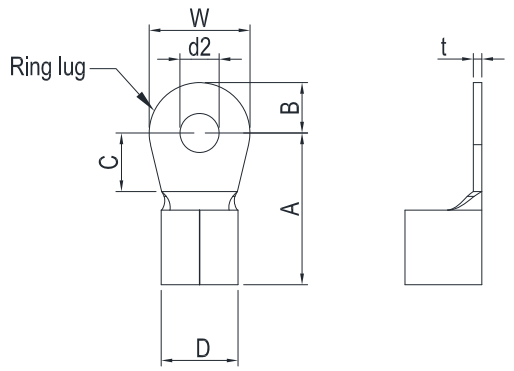

Figure 1.

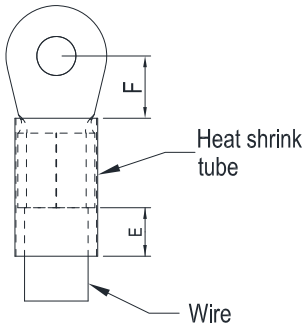

Figure 2.

VJ-A and VJ-C Air Cooled

Frame D

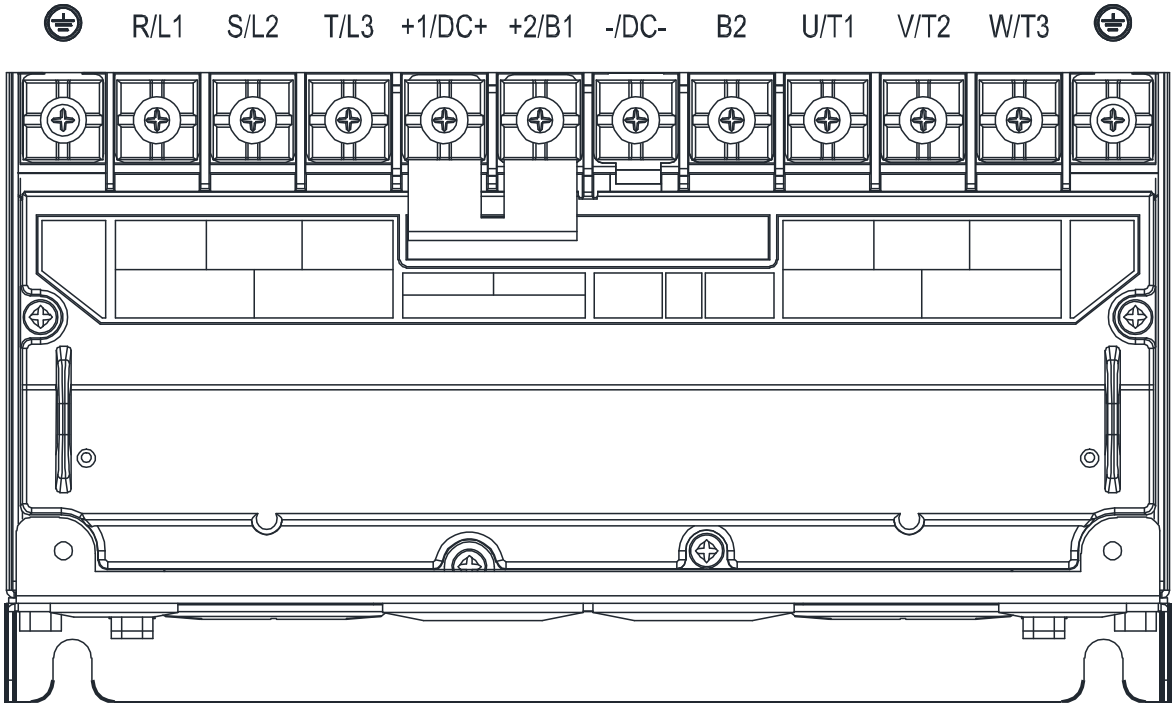

	Main Circuit Terminals: R/L1, S/L2, T/L3, U/T1, V/T2, W/T3, DC+, DC-, B1, B2			Grounding Terminal: ⏚		
Models	Max. Wire Gauge	Mini. Wire Gauge	Screw Size and Torque Force (± 10%)	Max. Wire Gauge	Mini. Wire Gauge	Screw Size and Torque Force (± 10%)
VFD150VL23A-J	35 mm^2 (2 AWG)	35 mm^2 (2 AWG)	M6 50 kg-cm (43.4 lb-in) (4.9 Nm	35 mm^2 (2 AWG)	35 mm^2 (2 AWG)	M6 50 kg-cm (43.4 lb-in.) (4.9 Nm)
VFD185VL23A-J		35 mm^2 (2 AWG)		35 mm^2 (2 AWG)	35 mm^2 (2 AWG)	
VFD220VL23A-J		35 mm^2 (2 AWG)		35 mm^2 (2 AWG)	35 mm^2 (2 AWG)	
VFD300VL43A-J, VFD300VL43C-J		35 mm^2 (2 AWG)		35 mm^2 (2 AWG)	16 mm^2 (6 AWG)	
VFD370VL43A-J, VFD370VL43C-J		35 mm^2 (2 AWG)		35 mm^2 (2 AWG)	16 mm^2 (6 AWG)	

NOTE:

1. If you install at Ta 45°C environment, select copper wire with voltage rating of 600 V and temperature resistance of 75°C or 90°C
2. If you install at Ta 45°C above environment, select copper wire with voltage rating of 600 V and temperature resistance of 90°C or above.
3. For UL installation compliance, use copper wires when installing. The wire gauge is based on a temperature resistance of 75°C, in accordance with UL requirements and recommendations.
4. Do not reduce the wire gauge when using higher temperature wire.
5. For VFD220VL43A-J model, if you install it at Ta 30°C above environment, select copper wire with voltage rating of 600V and temperature resistance of 90°C or above.

Terminal Block Specification:

Unit: mm

Frame Size	AWG	VENDOR	P/N	A (max.)	B (max.)	C (min.)	D (max.)	d2 (min.)	E (min.)	F (min.)	W (max.)	t (max.)
D	6	K.S.T.	RNBL14-6	30.0	10.0	9.5	14	6.2	13.0	9.5	18.5	3.0
	2	K.S.T.	RNBS38-6									

r

- The following additional terminals are required when wiring. The additional terminal dimension should comply with Figure 1 below.
- After crimping the wire to the ring lug (must be UL approved), UL and CSA approved R/C (YDPU2), install heat shrink tubing rated at a minimum of 600 V_{AC} insulation over the live part. Refer to Figure 2 below.

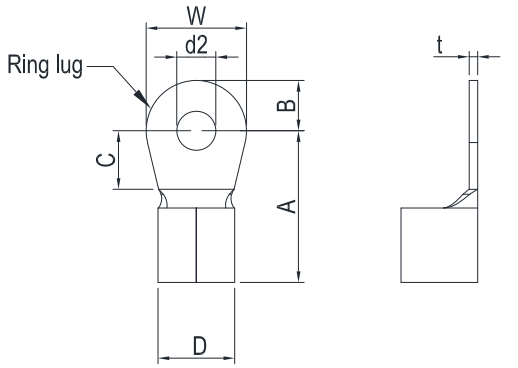

Figure 1.

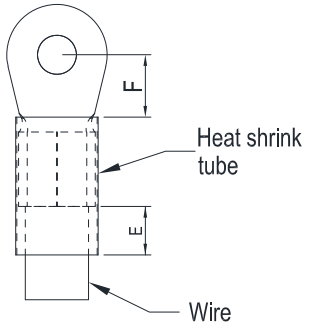

Figure 2.

VJ-A Air Cooled Frame E6 and VJ-C Air Cooled Frame E4

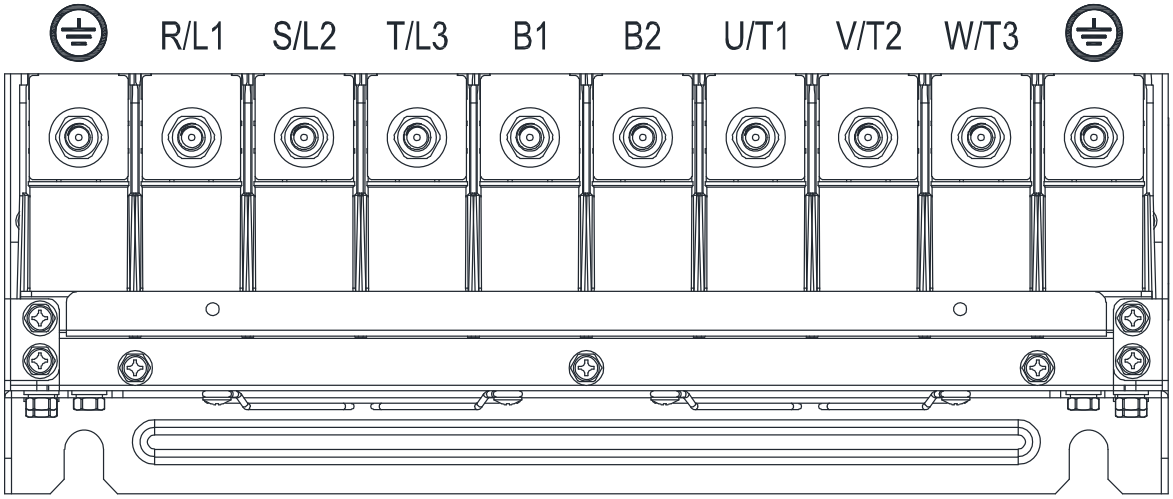

	Main Circuit Terminals: R/L1, S/L2, T/L3, U/T1, V/T2, W/T3, DC+, DC-, B1, B2			Grounding Terminal: ⏚		
Models	Max. Wire Gauge	Mini. Wire Gauge	Screw Size and Torque Force (± 10%)	Max. Wire Gauge	Mini. Wire Gauge	Screw Size and Torque Force (± 10%)
VFD300VL23C-J	120mm^2 (4/0 AWG)	70 mm^2 (2/0 AWG)	M8 180 kg-cm (156.2 lb-in) (17.65 Nm)	70 mm^2 (2/0 AWG)	35 mm^2 (2 AWG)	M8 180 kg-cm (156.2 lb-in.) (17.65 Nm)
VFD370VL23C-J		120mm^2 (4/0AWG)		120 mm^2 (4/0 AWG)	70 mm^2 (2/0 AWG)	
VFD450VL43A-J, VFD450VL43C-J		50 mm^2 (1/0 AWG)		50 mm^2 (1/0 AWG)	25 mm^2 (4 AWG)	
VFD550VL43A-J, VFD550VL43C-J		70 mm^2 (2/0 AWG)		70 mm^2 (2/0 AWG)	35 mm^2 (2 AWG)	
VFD750VL43A-J, VFD750VL43C-J		120 mm^2 (4/0 AWG)		120 mm^2 (4/0 AWG)	70 mm^2 (2/0 AWG)	

NOTE:

1. If you install at Ta 45°C environment, select copper wire with voltage rating of 600 V and temperature resistance of 75°C or 90°C
2. If you install at Ta 45°C above environment, select copper wire with voltage rating of 600 V and temperature resistance of 90°C or above.
3. For UL installation compliance, use copper wires when installing. The wire gauge is based on a temperature resistance of 75°C, in accordance with UL requirements and recommendations.
4. Do not reduce the wire gauge when using higher temperature wire.

Terminal Block Specification:

Unit: mm

Frame Size	AWG	Vendor	P/N	A (MAX.)	B (MAX.)	C (MIN.)	D (MAX.)	d2 (MIN.)	E (MIN).	F (MIN.)	W (MAX.)	T (MAX.)
E4, E6	4	K.S.T	RNB22-8	50.0	16.0	10.0	27.0	8.3	13.0	14.0	28.0	6.0
	2	K.S.T	RNBS38-8									
	1/0	K.S.T	RNB60-8									
	2/0	K.S.T	RNB70-8									
	3/0	K.S.T	RNB80-8									
	4/0	K.S.T	SQNBS100-8									

NOTE:

- The following additional terminals are needed when wiring. The additional terminal dimension should comply with Figure 1 below.
- After crimping the wire to the ring lug (must be UL approved), UL and CSA approved R/C (YDPU2), install heat shrink tubing rated at a minimum of 600 V_{AC} insulation over the live part. Refer to Figure 2 below.

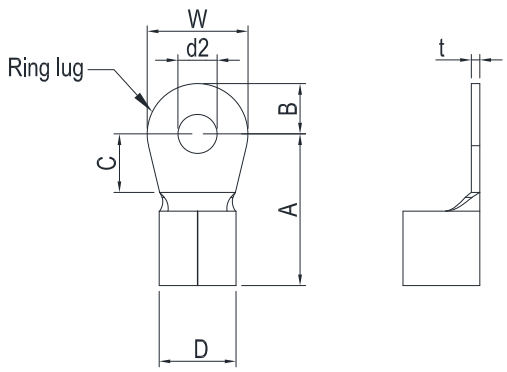

Figure 1.

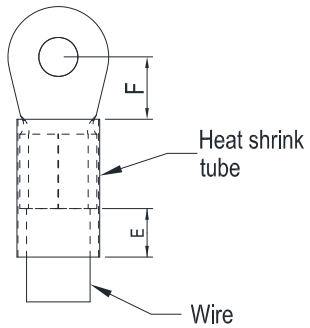

Figure 2.

2-3 Description of Terminals on Control Circuit

Description of SINK (NPN)/SOURCE (PNP) Mode Selection Terminals

① Sink mode
use internal power (+24V$_{DC}$)

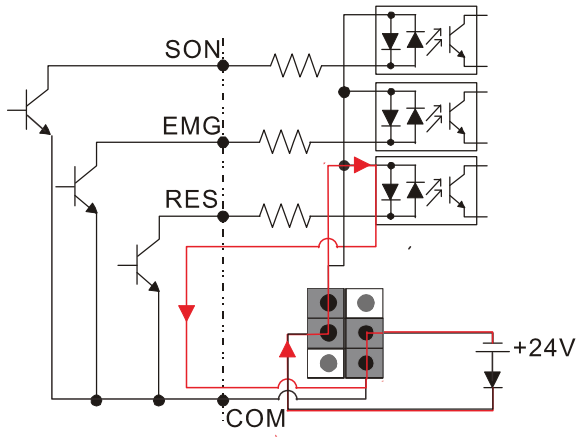

② Source mode
use internal power(+24V$_{DC}$)

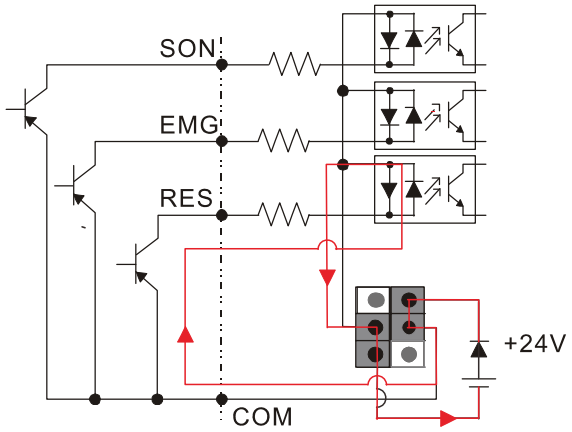

③ Sink mode
use external power

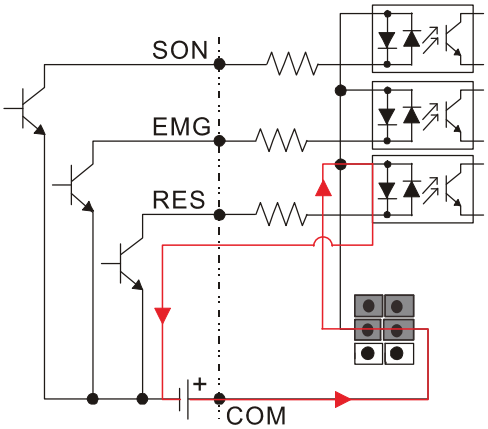

external power: +24V

④ Source mode
use external power

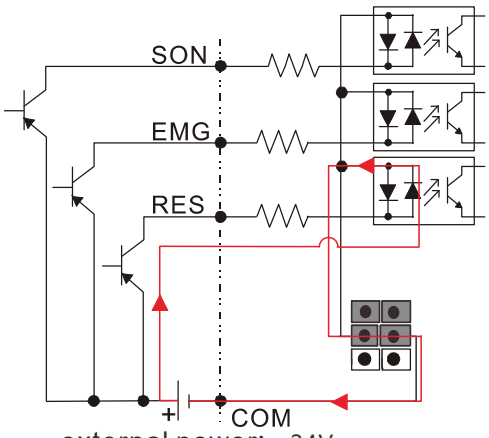

external power: +24V

Pluggable Wiring Terminal Blocks:

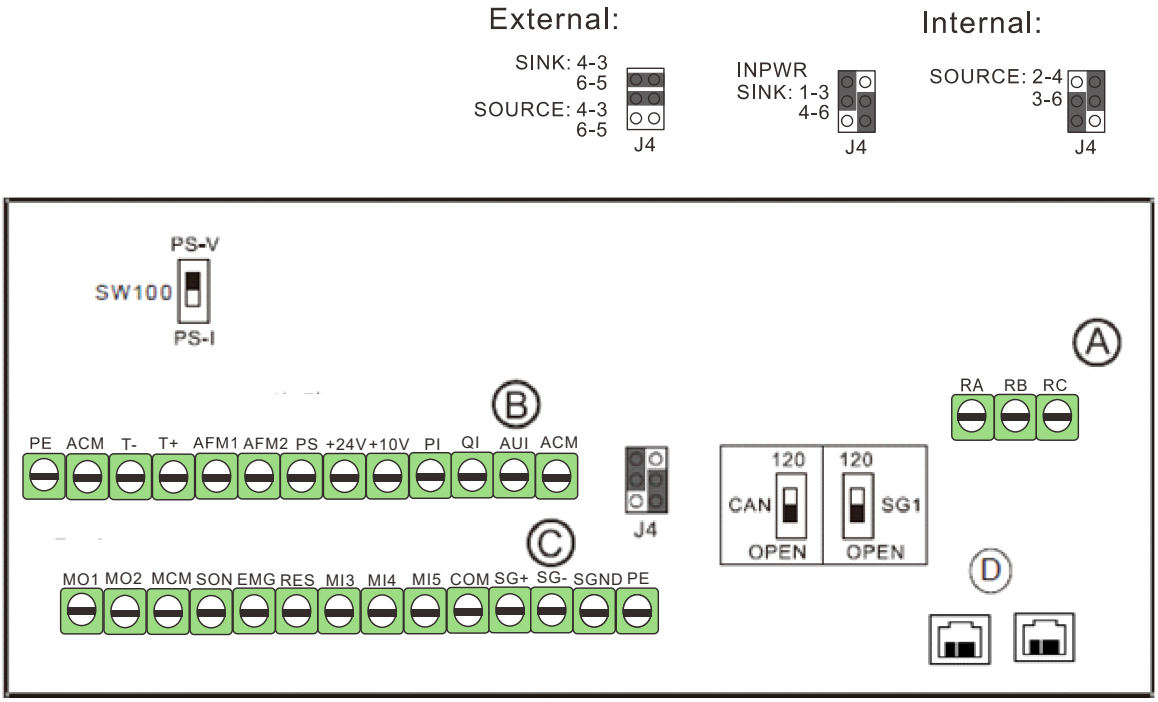

Item	Wire Gauge					Torque (±10%)
	Group	Conductor	Stripping length	Mini. Wire Gauge	Max. Wire Gauge	
Control Terminal	A	Solid Stranded	6mm	0.2mm^2 [24 AWG]	1.5mm^2 [16 AWG]	5kg-cm [4.4 lb-in.] [0.5 Nm]]
RJ-45	D					

Item	Wire Gauge					Torque (±10%)
	Group	Conductor	Stripping length	Mini. Wire Gauge	Max. Wire Gauge	
	B	Solid Stranded	7-8mm	0.2mm^2 [24 AWG]	2.1mm^2 [14 AWG]	2kg-cm [1.7 lb-in.] [0.2 Nm]]
	C	Solid Stranded	7-8mm	0.2mm^2 [24 AWG]	2.1mm^2 [14 AWG]	2kg-cm [1.7 lb-in.] [0.2 Nm]]

Wiring precautions:

For group A, B, C:

1. For group A: Tighten the wiring with a 3.5mm (wide) x 0.6mm (thick) slotted screwdriver
2. For group B, C . Tighten the wiring with a 2.5mm (wide) x 0.4mm (thick) slotted screwdriver
3. When wiring bare wires, make sure they are perfectly arranged to go through the wiring holes.

NOTE:

1. As we modify the fixed terminal block to the pluggable terminal blocks, the positions of the terminals are also changed. Please verify the differences between the original and new terminal blocks before wiring.
2. The RA, RB and RC terminals are still on a fixed terminal block as before.

Terminal	Features	Factory Setting (NPN Mode)	Difference between VJ-A and VJ-B
SON	Run-Stop	Terminal SON-COM: ON for Running; OFF for Stop	
EMG	External error input	External error input	
RES	Reset from error	Reset from error	
REV	TBA	TBA	New terminal
MI3	Multi-function input selection 3	Configured as no function in factory When it is ON, the input voltage is 24V_{DC} (Max: 30V_{DC}) and then input impedance is 3.75kΩ; when it is OFF, the tolerable leakage current is 10μA.	
MI4	Multi-function input selection 4		
MI5	Multi-function input selection 5		
COM	Common ground (Sink) for digital control signals	Common ground for multi-function input terminals	
RA	Error terminal 1 (Relay N.O. a)	Resistive load 5A(N.O.)/3A(N.C.) 240VAC 5A(N.O.)/3A(N.C.) 24VDC Inductive load 1.5A(N.O.)/0.5A(N.C.) 240VAC 1.5A(N.O.)/0.5A(N.C.) 24VDC	
RB	Error terminal 1 (Relay N.C. b)		
RC	Command contact for multi-function output terminals (Relay)		
MO1	Multi-function output terminal 1 (photocoupler)	The hybrid servo drive sends various monitoring signals by means of open-collector configuration. 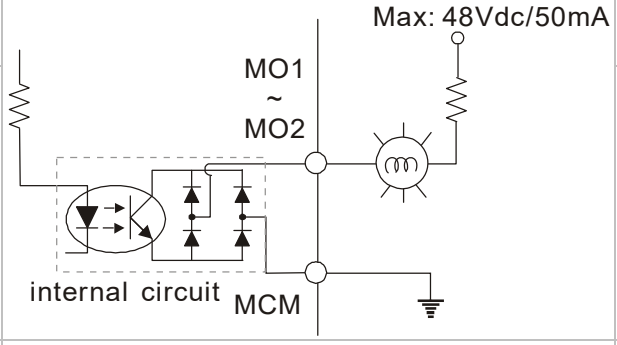 	
MO2	Multi-function output terminal 2 (photocoupler)		
MCM	Common ground for Multi-function output terminal (photocoupler)	Max 48V_{DC} 50mA	

Terminal	Features	Factory Setting (NPN Mode)	Difference between VJ-A and VJ-B
PS	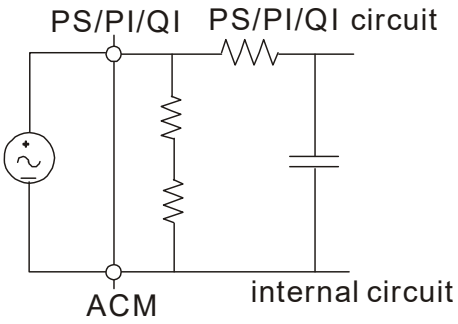	Pressure feedback Impedance: 200kΩ Resolution: 12 bits Range: 0 ~10V or 4~20mA = 0 ~ maximum pressure feedback value (Pr00-08). Use SW100 switch to input current, see Pr03-12 for more information.	Terminal PO
PI		Pressure Command Impedance: 200kΩ Resolution: 12 bits Range: 0 ~ 10V = 0 ~ the maximum pressure command value (Pr00-07)	
QI		Flow rate command Impedance: 200kΩ Resolution: 12 bits Range: 0 ~ 10V = 0 ~ the maximum flow rate	
AUI	Analog Voltage 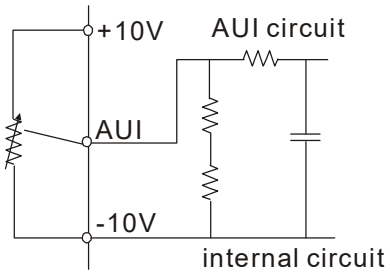	Impedance: 11.3kΩ Resolution: 12 bits Range: -10 ~ +10V_{DC}	
+10V	Power supply for configuration	Power supply for analog configuration +10V_{DC} 20mA	
+24V	Power supply terminal for the pressure sensor	Power supply for the pressure sensor +24V_{DC} 100mA	
AFM1	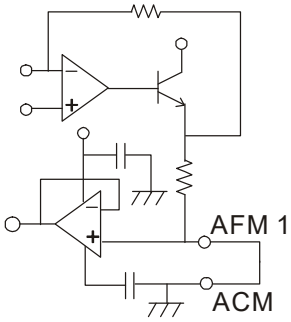	Impedance: 19.2kΩ (voltage output) Output current: 20mA max Resolution: 0 ~ 10V corresponding to the pressure feedback. Range: 0 ~ 10V	Terminal AFM

Terminal	Features	Factory Setting (NPN Mode)	Difference between VJ-A and VJ-B
AFM2	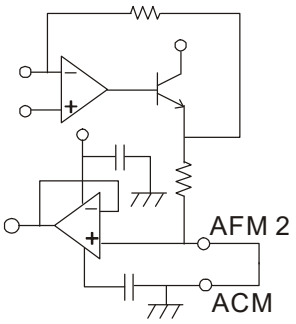	Impedance: 33.8kΩ (voltage output) Output current: 20mA max Resolution: ±10V corresponding to the maximum frequency Range -10~10V	
ACM	Common ground for analog control signals	Common ground terminal for analog control signals	
T+/ T-	Motor's thermal protection terminals	Support KTY84-130, PTC130 thermal switch	New terminal
SG+, SG-, SGND	Modbus RS-485	See Communication Parameters in Ch04 for more information.	New terminal
PE	protective grounding terminal		New terminal

Analog Input Terminals (PS, PI, QI, AUI, ACM)

☑ Analog input signals are easily affected by external noise. Use shielded wiring and keep it as short as possible (<20m) with proper grounding. If the noise is inductive, connecting the shield to terminal ACM can bring improvement.

☑ If the analog input signals (pressure sensor) are affected by noise from the hybrid servo drive, please connect a capacitor and ferrite core closed to the hybrid servo drive as indicated in the following diagrams. The magnetic permeability of the ferrite core should be over 5000μ to ensure an efficient noise isolation.

Wind each wires 3 times or more around the core

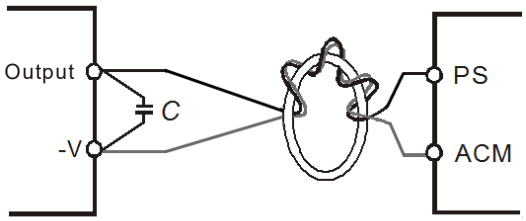

Transistor Output Terminals (MO1, MO2, MCM)

☑ Make sure to connect the digital outputs to the right polarity.

☑ When connecting a relay to the digital outputs connect a surge absorber across the coil and check the polarity.

Chapter 3 Machine Adjustment Procedure

3-1 Description of Digital Keypad

3-2 System Setup and Machine Adjustment Flowcharts

3-3 Machine Adjustment Procedure

3-4 Confluence Machine Tuning Procedure

3-5 Confluence / Diversion Mode Adjustment Procedure

CAUTION	☑ Please re-check if the wiring is correct before start running the machine. Particularly, make sure that the output terminals of the hybrid servo drive, U/T1, V/T2, and W/T3, must not be used as power input terminals. Make sure that the good ground terminal ⏚ is grounded. ☑ It is not allowed to operate the switches with wet hands. ☑ Make sure that there is no short-circuit or ground short circuit conditions between the terminals or exposed live parts. ☑ The power switch can be turned on only with the cover installed.
WARNING	☑ If any fault occurs during the operation of the hybrid servo drive and the motor, stop the machine immediately, and refer to “Troubleshooting” to check the cause of the faulty condition. After the hybrid servo drive stop its output but the main circuit power terminals L1/R, L2/S, and L3/T are not disconnected, if the operator touches the output terminals U/T1, V/T2, and W/T3 of the hybrid servo drive, electric shock may occur.

3-1 Description of Digital Keypad

Appearance of Keypad Control Panel KPVJ-LE02

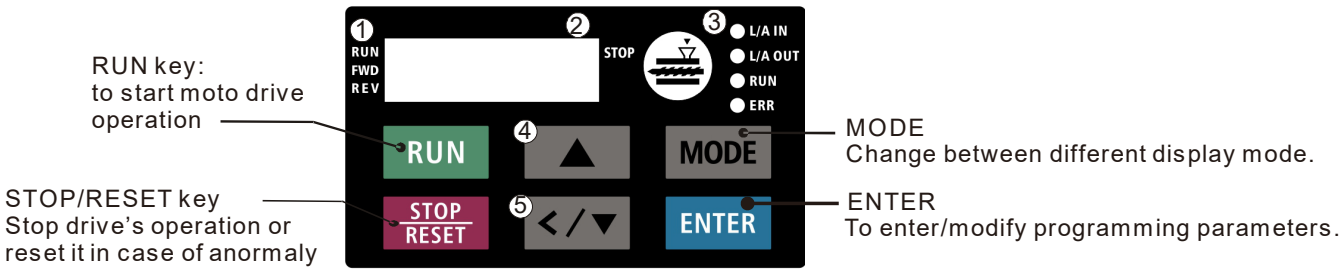

❶ Status display
Display driv's current status

❷ LED display
Indicate frequency, voltage, current, user defined units and etc..

❸ CANopen indicator light

❹ UP key
Set the parameter value and change the numeric data such as frequency.

❺ Left/ Down key
Set the parameter value and change the numeric data.
Press and hold the MODE key then you can use the Left key.

Description of Displayed Function Items

Displayed Item	Description
RUN FWD REV F60.00 STOP	The current frequency set for the hybrid servo drive
RUN FWD REV H50.00 STOP	The frequency delivered by hybrid servo drive to the motor
RUN FWD REV b 120.0 STOP	The user-defined physical quantity (Pr. 00-04)
RUN FWD REV A 5.00 STOP	Load current
RUN FWD REV Frd STOP	Forward command
RUN FWD REV rEu STOP	Reverse command
RUN FWD REV 01-00 STOP	Displays the selected parameter
RUN FWD REV 10 STOP	Display the parameter value
RUN FWD REV EF STOP	Display the external fault
RUN FWD REV End STOP	If the "End" message (as shown in the left figure) is displayed on the display area for

	about one second, it means that data has been accepted and automatically stored in the internal memory
RUN FWD REV Err STOP	If the setting data is not accepted or its value exceeds the allowed range, this error message will be displayed

Keypad Panel Operation Procedure:

A. Selecting Mode

Note: In the selection mode, press ENTER to set the parameters

Setting Parameters

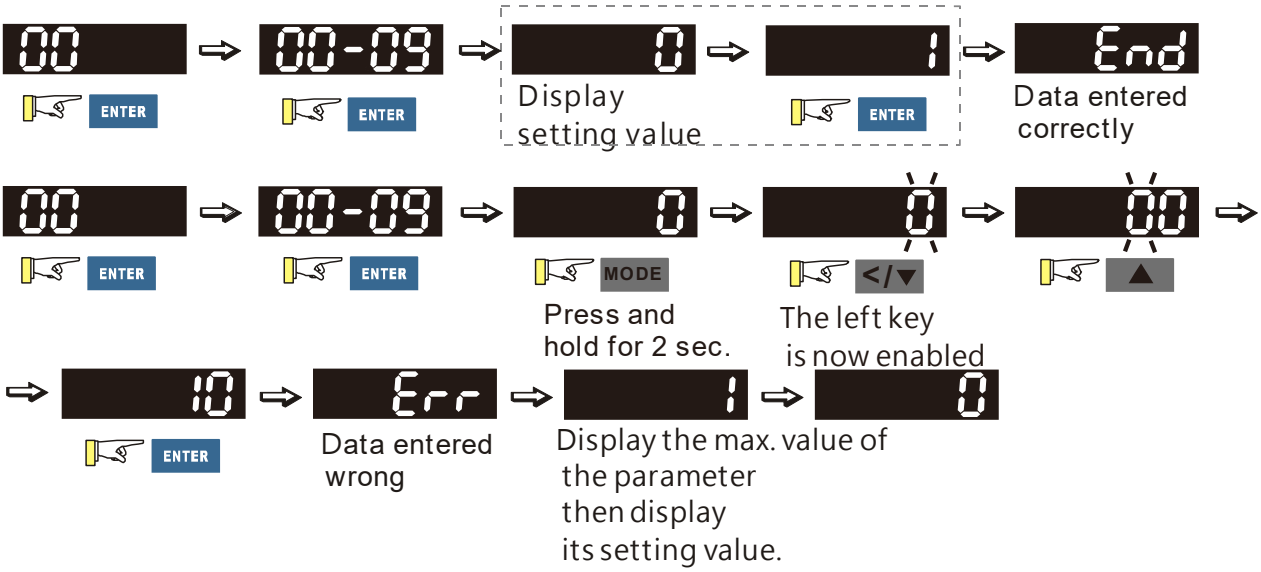

Note: In the parameter setting mode, press MODE to return to the mode selecting.

NOTE:

1. To disable LEFT key: press UP/ DOWN to adjust the number. When finishing the adjustment, press ENTER.
2. To enable the LEFT key: Press and hold MODE for two second until last digit of the parameter starts to blink. Now press UP, the value of the number increases. When the number reaches 9, press UP again, the number goes back to 0.
3. By pressing DOWN, the blinking cursor moves one digit to the left. Then press UP to increase the value of the number. Once reaching the desired number, press DOWN again to move the cursor one digit to the left.
4. When finishing setting the parameters, the LEFT function is still enabled. Press MODE for two seconds to disable LEFT function.

Modifying Data

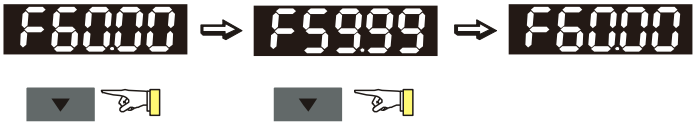

Operating Direction

While the motor drive is controlled from a digital keypad.

Multi-Function Display Page

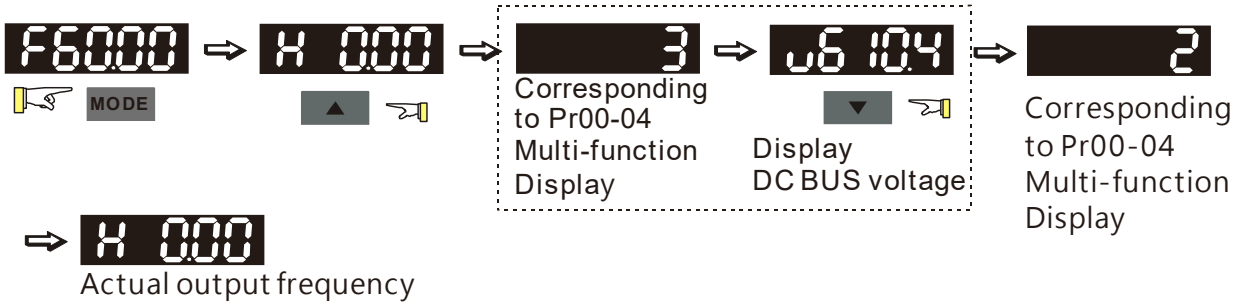

Display Fault/ Warning

Display Fault Codes

(1

Press RESET to clear fault code

(2)

Repower on to clear fault code

Display Warning Codes

B. Frequency Command Page

Normal Mode 1(Pr.01-02: Maximum Frequency has two digits. Example: Pr.01-02 = 60.00Hz)

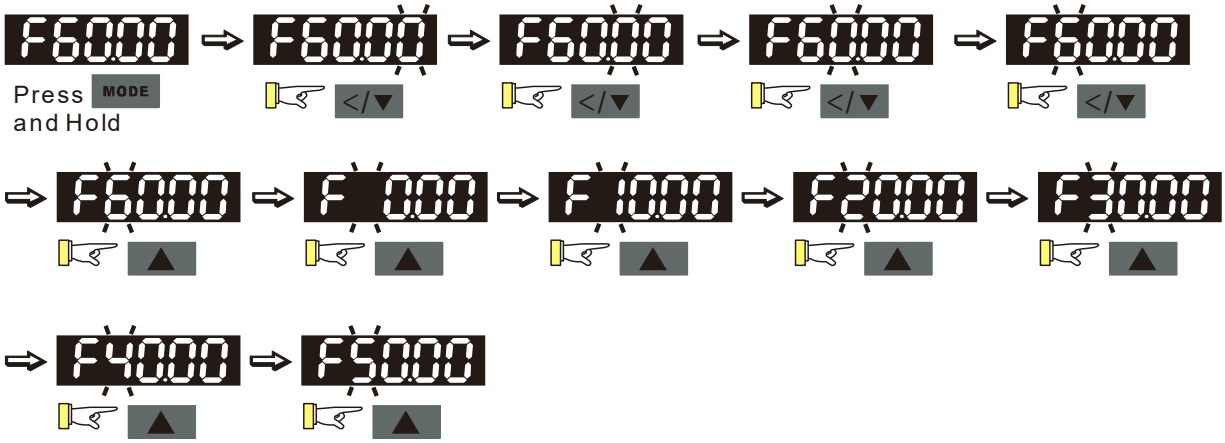

Normal Mode 2 (Pr.01-02: Maximum Frequency has three digits. Example: Pr.01-02 = 599.0Hz)

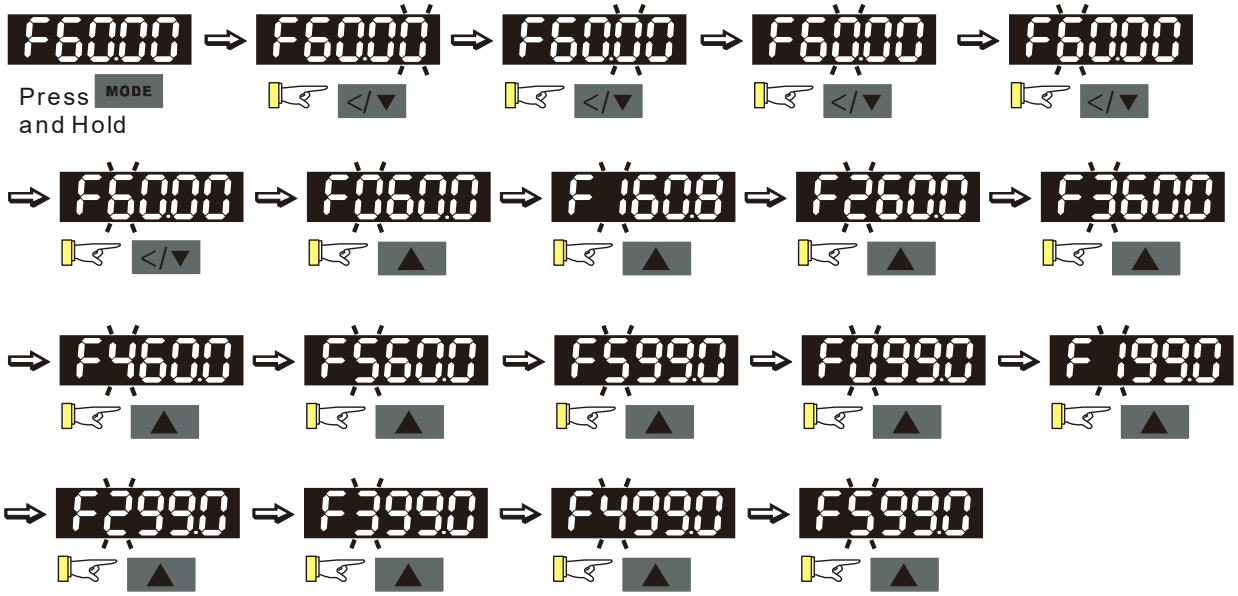

List of Characters Shown on the Seven-segment Display of the Digital Keypad Panel

Numeric	0	1	2	3	4	5	6	7	8	9
Seven-segment Display	0	1	2	3	4	5	6	7	8	9
English Letter	A	a	B	b	C	c	D	d	E	e
Seven-segment Display	A	-	-	b	C	c	-	d	E	-
English Letter	F	f	G	g	H	h	I	i	J	j
Seven-segment Display	F	-	G	-	H	h	L	i	J	j
English Letter	K	k	L	l	M	m	N	n	O	o
Seven-segment Display	K	-	L	-	-	-	-	n	-	o
English Letter	P	p	Q	q	R	r	S	s	T	t
Seven-segment Display	P	-	-	q	-	r	S	-	-	t
English Letter	U	u	V	v	W	w	X	x	Y	y
Seven-segment Display	U	u	-	v	-	-	-	-	Y	-
English Letter	Z	z								
Seven-segment Display	Z	-								

3-2 System Setup and Machine Adjustment Flowcharts: VFD-VJ (Choose a motor for Your application.)

1)

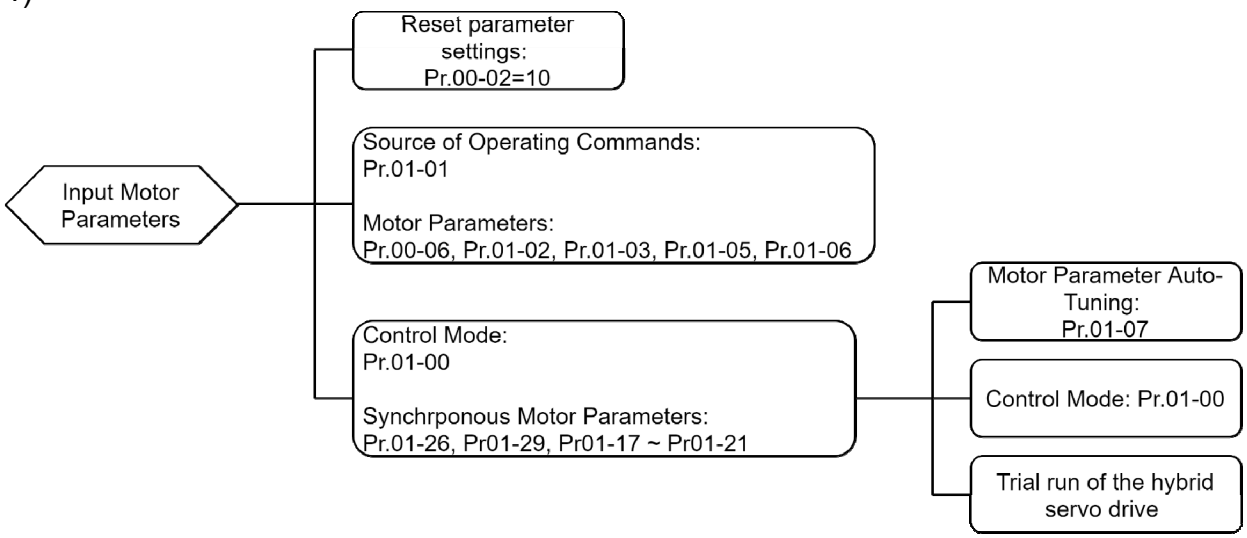

2)

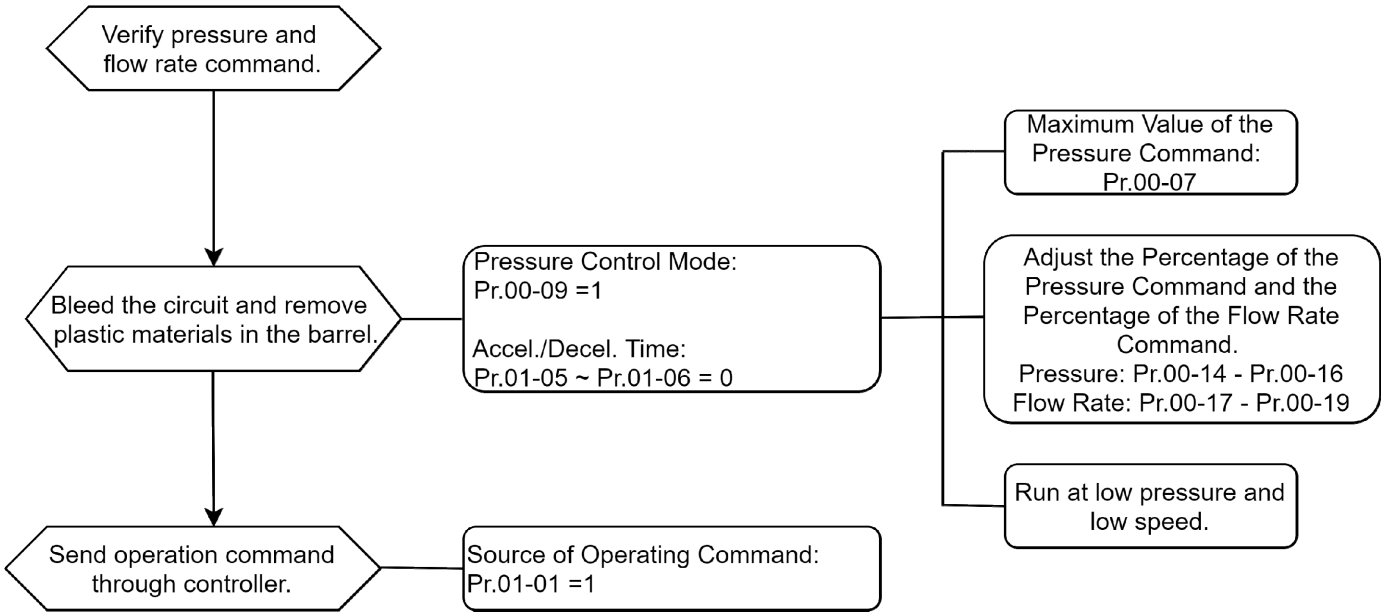

3)

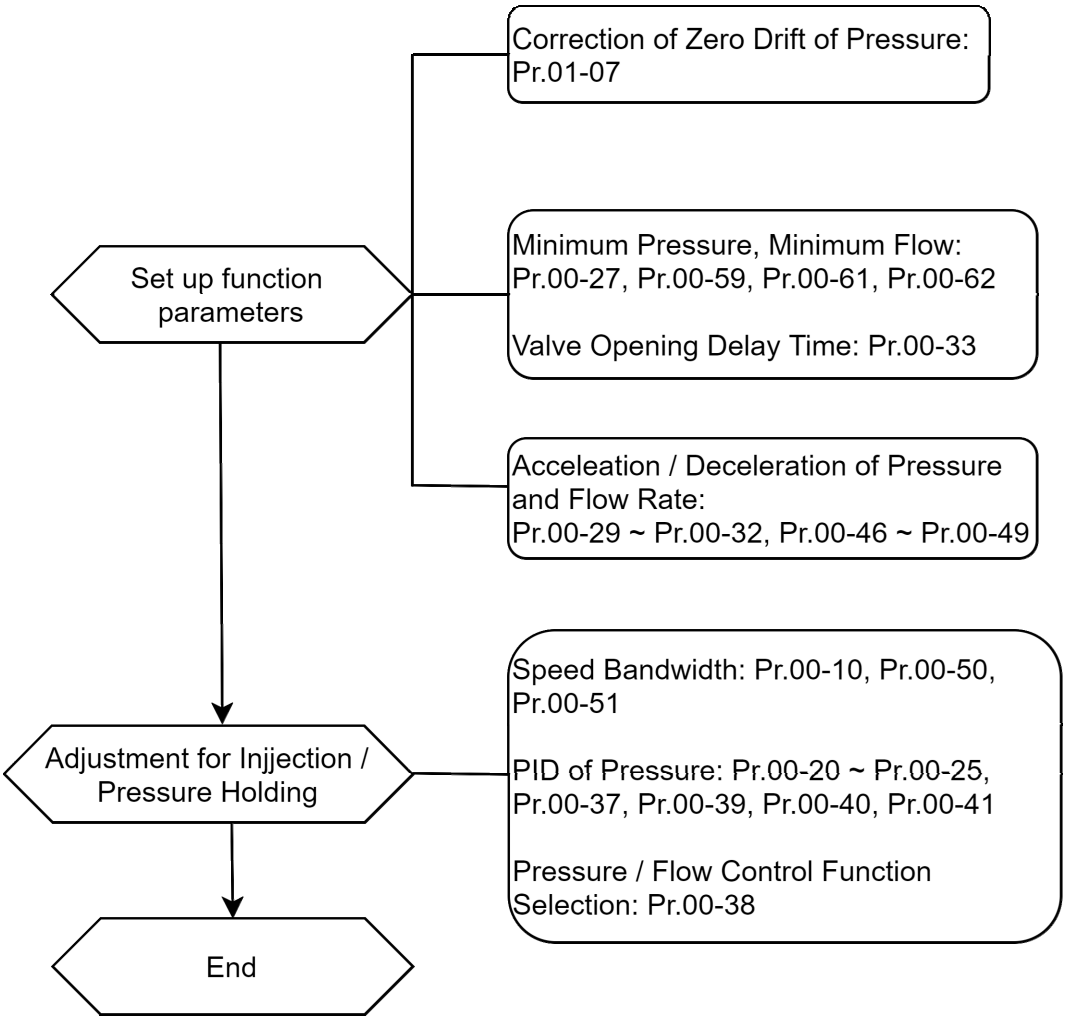
Set up function parameters
Correction of Zero Drift of Pressure: Pr.01-07
Minimum Pressure, Minimum Flow: Pr.00-27, Pr.00-59, Pr.00-61, Pr.00-62
Valve Opening Delay Time: Pr.00-33
Acceleation / Deceleration of Pressure and Flow Rate: Pr.00-29 ~ Pr.00-32, Pr.00-46 ~ Pr.00-49
Adjustment for Injjection / Pressure Holding
Speed Bandwidth: Pr.00-10, Pr.00-50, Pr.00-51
PID of Pressure: Pr.00-20 ~ Pr.00-25, Pr.00-37, Pr.00-39, Pr.00-40, Pr.00-41
Pressure / Flow Control Function Selection: Pr.00-38
End

3-3 Machine Adjustment Procedure

Perform the following operation procedure by using the Digital Keypad (KPVJ-LE02)

Step 1. Enter the motor's parameters

- Restore the factory default values by setting Pr.00-02 = 10

  Reset parameter settings

Setting value of Pr.00-02	10: Reset parameter values

- Please make sure if the command source has been restored to the factory default (operation by external terminals)

  If the KPVJ-LE02 is used, set Pr.01-01=0

  Source of operation command

Setting value of Pr.01-01	0: Operation by using the digital keypad 1: Operation by using the external terminals. The Stop button on the keypad is disabled. 2: Communication using RS-485. The Stop button on the keypad is disabled

- Change the display type from Frequency command (Hz) into Speed (rpm)

  Display the speed (rpm) defined by the user

Setting value of Pr. 00-06	0~39999rpm

- Set Pr. 01-02

  Motor's maximum operation frequency

Setting value of Pr.01-02	50.00 – 600.00Hz

- Set Pr. 01-03

  Motor's rated frequency

Setting value of Pr.01-03	0.00 – 600.00Hz

- Set Pr.01-05 & Pr.01-06

  Acceleration time setting

Setting value of Pr.01-05	0.00 – 600.00 seconds

  Deceleration time setting

Setting value of Pr.01-06	0.00 – 600.00 seconds

The settings for the induction and synchronous motors are different. Please configure these parameters according to the related adjustment method for the motor.

Induction motor

- Set Pr.01-00 = 0

Control mode

Setting value of Pr. 01-00	0: VF 1: Reserved 2: Reserved 3: FOC vector control + Encoder (FOCPG) 4: Reserved 5: FOCPM 6: Reserved

- Set Pr.01-26 = 0

Encode type

Setting value of Pr.01-26	0: ABZ 1: ABZ+HALL (only used for Delta's servo motors) 2: ABZ+HALL 3: Resolver

- Set Pr.01-29

Number of pulses for each revolution of the encoder

Setting value of Pr.01-29	1~20000

- Set Pr. 01-08

The rated current of the induction motor

Setting value of Pr. 01-08	0~655.35 Amps

- Set Pr.01-09

The rated power of the induction motor

Setting value of Pr.01-09	0.00 – 655.35kW

- Set Pr.01-10

The rated speed (rpm) of the induction motor

Setting value of Pr.01-10	0~65535

- Set Pr.01-11

Number of poles of the induction motor

Setting value of Pr.01-11	2~20

- Check if the motor can be separated from the pump
  1. If it can be separated, set Pr.01-07 as 1 and carry out a dynamic measurement
  2. If it cannot be separated, open the safety valve, enter the no-load current of the induction motor Pr.01-12 and set Pr.01-07 as 2. Then carry out the static measurement

Motor Parameter Auto Tuning

Setting value of Pr. 01-07	0: No function
	1: Rolling test for induction motor(IM) (Rs, Rr, Lm, Lx, no-load current)
	2: Static test for induction motor(IM)
	3: Reserved
	4: Auto measure the angle between magnetic pole and PG origin
	5: Dynamic rolling test for synchronous permanent-magnet (SPM) motor
	13: Dynamic rolling test for interior permanent-magnet (IPM) synchronous motor

- During the automatic measurement process of the induction motor, the digital keypad will show the message “tun”. After the measurement is finished, the motor automatically shuts down, and the measurement values are stored into Pr.01-13 to Pr.01-16. If the digital keypad shows “AUE”, please check if the wiring is correct and if the parameters are set correctly.

- The machine will shut off the power and then supply the power again

- Set Pr.01-00 = 3

Control mode

Setting value of Pr. 01-00	0: VF
	1: Reserved
	2: Reserved
	3: FOC vector control + Encoder (FOCPG)
	4: Reserved
	5: FOCPM
	6: Reserved

- Test run

  When the motor is in a no-load state, the speed command is set to 10 rpm for low-speed test run. Make sure that the output current value is close to the no-load current.

  If no error occurs, gradually increase the value of speed command to the highest speed.

- Make sure that the pump’s oil supply direction is the forward direction of the motor.

Synchronous motor

- Set Pr.01-00 = 5

Control mode

Setting value of Pr.01-00	0: VF
	1: Reserved
	2: Reserved
	3: FOC vector control + Encoder (FOCPG)
	4: Reserved
	5: FOCPM
	6: Reserved

- Set Pr.01-26 = 3

Encode type

Setting value of Pr.01-26	0: ABZ
	1: ABZ+HALL (only used for Delta's servo motors)
	2: ABZ+HALL
	3:Resolver

- Set Pr.01-29

Number of pulses for each revolution of the encoder

Setting value of Pr.01-29	1~20000

- Set Pr.01-17

The rated current of the synchronous motor

Setting value of Pr.01-17	0~655.35 Amps

- Set Pr.01-18

The rated power of the synchronous motor

Setting value of Pr.01-18	0.00 – 655.35kW

- Set Pr.01-19

The rated speed (rpm) of the synchronous motor

Setting value of Pr.01-19	0~65535

- Set Pr.01-20

Number of poles of the synchronous motor

Setting value of Pr.01-20	2~20

- Set Pr.01-21

The inertia of the synchronous motor's rotor

Setting value of Pr.01-21	0.0~6553.5 *10^{-4} kg.m^2

- Check if the motor can be separated from the pump
- If it can be separated, set the Pr.01-07 as 5 and carry out the parameter measurement of the synchronous motor
- If it cannot be separated, open the safety valve, set Pr.01-07 as 5 and carry out the parameter measurement of the synchronous motor

Motor Parameter Auto Tuning

Setting value of Pr.01-07	0: No function 1: Rolling test for induction motor(IM) (Rs, Rr, Lm, Lx, no-load current) 2: Static test for induction motor(IM) 3: Reserved 4: Auto measure the angle between magnetic pole and PG origin 5: Dynamic rolling test for synchronous permanent-magnet (SPM) motor 13: Dynamic rolling test for interior permanent-magnet (IPM) synchronous motor

- During the automatic measurement process of the synchronous motor, the digital keypad will show the message "tun". After the measurement is finished, the motor automatically shuts down, and the measurement values are stored into Pr.01-22 to 01-25. If the digital keypad shows "AUE", please check if the wiring is correct and if the parameters are set correctly.
- Set the value of Parameter 01-07 as 4 and press [Run]. When the operation is complete, the PG offset angle of PM motor is written to Pr.01-27

Motor Parameter Auto Tuning

Setting value of Pr.01-07	0: No function 1: Rolling test for induction motor(IM) (Rs, Rr, Lm, Lx, no-load current) 2: Static test for induction motor(IM) 3: Reserved 4: Auto measure the angle between magnetic pole and PG origin 5: Dynamic rolling test for synchronous permanent-magnet (SPM) motor 13: Dynamic rolling test for interior permanent-magnet (IPM) synchronous motor

- The machine will shut off power and then supply power again

- Test run

When the motor is in a no-load state, the speed command is set to 10 rpm for low-speed test run. Make sure that the output current value is close to the zero current.

If no error occurs, gradually increase the value of speed command to the highest speed.

Make sure that the pump's oil supply direction is the forward direction of the motor.

NOTE:

- When using SPM motor, set Pr01-07=5 to do rolling test for SPM motor.
- When using IPM motor, set Pro1-07=13 to do dynamic rolling test for IPM motor.

Step 2. Estimation of Inertia

- Set the speed command as 1000 rpm
- Set Pr.01-05 & Pr.01-06 = 0.3~0.5 seconds

Acceleration time setting

Setting value of Pr.01-05	0.00 – 600.00 seconds

Deceleration time setting

Setting value of Pr. 01-06	0.00 – 600.00 seconds

- Set Pr.01-31 = 2 and then press [Run]

System control

Setting value of Pr.01-31	0: No function 1: ASR automatic tuning 2: Estimation of inertia

- Check if the value of Pr.01-32 is converged. If it is converged, stop the operation. If not, switch the rotation direction after the speed is stable.

The unity value of the system inertia

Setting value of Pr. 01-32	1~65535 (256 = 1 per unit)

- After the operation stops, select Pr.01-32 and press the [ENTER] button to complete the “write” operation.
- Set Pr.01-31=1 and the estimation of the motor’s inertia is complete.

Step 3. Connect the motor and the pump and then confirm the pressure feedback signal

- Set Parameter 00-04 = 11 and then supply voltage to PS

Selection of multi-function display

Setting value of Pr.00-04	11: display the signal value of the analog input terminal PS with 0~10V mapped to 0~100%

- Pr.00-08 = related pressure setting value of the pressure sensor at 10V

Maximum pressure feedback value

Setting value of Pr.00-08	0~250 bar

Set the speed command as 10rpm and press [RUN] to confirm if the pressure value through the pressure gauge > 0.

If the pressure value ≦0

- ☑ Gradually increase the rotation speed
- ☑ Confirm the operation direction of the pump
- ☑ Make sure that the direction valve is in the close state

If the pressure value > 0

- ☑ Make sure the multi-function display on the keypad panel shows the voltage indicating the same pressure as the pressure gauge

Example: If the pressure sensors indicates 250bar at 10V, when the pressure gauge shows 50 bar, the pressure sensor output voltage should be around 50/250 * 10 = 2V, and the voltage shown on the keypad panel should be 20.0 (%)

- Observe if there is oil leakage.

Step 4. Confirm the pressure command and flow command

- Pr. 00-09 = 1 for pressure control mode

Pressure control mode

Setting value of Pr.00-09	0: Speed control 1: Pressure control

- Pr. 00-04 = 12 PI for input voltage

Selection of multi-function display

Setting value of Pr.00-04	12: display the signal value of the analog input terminal PI with 0~10V mapped to 0~100%

- Pr. 00-07 = related pressure value of the pressure command at 10V

Maximum pressure command

Setting value of Pr.00-07	0~250 bar

- Send the maximum pressure command through the controller and then check the multi-function display page to enter this value into Pr. 00-14
- Send a half pressure command through the controller and then check the multi-function display page to enter this value into Pr. 00-15
- Send the minimum pressure command through the controller and then check the multi-function display page to enter this value into Pr. 00-16

Example: The 0~10V of the PS input terminal map to the 0~250Bar of the pressure sensor. If the maximum pressure on the controller of a machinery is 140Bar and corresponds to 10V, then Pr. 00-07=140. Now, set the pressure as 140Bar through the controller, the voltage value shown on the display is 5.6 = 10x (140/ 250). Input this value to the Pr. 00-14.

Then set the pressure as 70bar on the controller, and now the voltage value displayed on the keypad panel is about 2.8 = 10x (70/250). Input this value to the Pr. 00-15.

Then set the pressure as 0 bar on the controller, and the voltage value shown on the display is 0.0 = 10x (0/250). Input this value in the Pr.00-16.

- Set Pr.00-04 = 25 for QI input voltage

Selection of multi-function display

Setting value of Pr.00-04	25: display the signal value of the analog input terminal OI with 0~10V mapped to 0~100%

- Send the 100% flow rate through the controller and then check the multi-function display page to enter this value into Pr. 00-17
- Send the 50% flow rate through the controller and then check the multi-function display page to enter this value into Pr. 00-18
- Send the 0% flow rate through the keypad panel and then check the multi-function display page to enter this value into Pr.00-19

Step 5. Bleed the circuit and make sure if there is any plastic material in the barrel. The machine can start operation only when there are no plastic materials inside the barrel.

- Pr. 00-09 = 1 for pressure control mode

Pressure control mode

Setting value of Pr.00-09	0: Speed control 1: Pressure control

- Set Pr.01-05 & Pr.01-06 = 0 second

Acceleration time setting

Setting value of Pr.01-05	0.00 – 600.00 seconds

Deceleration time setting

Setting value of Pr.01-06	0.00 – 600.00 seconds

- When the air is bleeding completely, if there is any pressure fluctuation during operation, please adjust the pressure control Parameter PI in accordance with the method described in the “Description of Parameters”.

Step 6. Send operation command though the controller

- Pr.01-01=1

Source of operation command

Setting value of Pr. 01-01	0: Operation by using the digital keypad 1: Operation by using the external terminals. The Stop button on the keypad is disabled. 2: Communication using RS-485. The Stop button on the keypad is disabled

Step 7. Adjustment for injection/pressure holding

- Heat up the barrel to the required temperature and set the controller in manual control mode.
- Set the Ki values for the three stages PI to 0 (Pr.00-21, Pr.00-23 , and Pr.00-25) and Kp values to small values (≦50.0)

- Start the plastic injection operation. The “Target value” is low pressure (＜50 bar) and low flow rate (＜30%)。
- Press the “injection" button on the operation panel for the injection operation or the machine will enter the pressure holding operation (depending on the position of the cylinder)
- In the pressure holding state without causing the vibration of the motor, increase the speed bandwidth to the maximum value 40Hz (Pr. 00-10).
- In the pressure holding condition, if the pointer of the pressure gauge or the monitored pressure waveform has no fluctuation, it means that the pressure is stably fed back. It is allowed to increase the three Kp values.
- When the pressure feedback becomes unstable, reduce the three Kp values by 20% (example: the three Kp values are reduced from 100.0 to 80.0). Adjust the three Ki values to eliminate the steady-state error so to speed up system response.
- When the above steps are completed, increase the "target value" for the pressure command.
- Observe if the pressure feedback is stable. If there is an abnormal condition, please solve it as follows:

Solve the pressure instability problem

Instability at high pressure

If the hybrid servo drive has an overload condition, please increase the power rating of the hybrid servo drive

Instability over the entire pressure range

1. Set Pr.00-09 = 0 to switch to the speed control
2. If the hydraulic circuit is in the closed state, send a low speed command so as to allow a pressure feedback value of 40-50% of the value for pressure command (Pr.00-07)
3. By using the monitoring software, observe if the pressure waveform has irregular fluctuations.

   - Pressure waveform fluctuates
     It may be a ground interference problem. If the motor or the three-phase power supply is grounded, disconnect the ground wire. If the motor or three-phase power supply has no ground wire, you can install a ground wire for anti-interference protection.

     It may be a grounding problem of the shield mesh (as the red thick line shown below). If the shield mesh is properly grounded, the ground wire can be removed; if the shield mesh has no grounding wire, install a ground wire for anti-interference protection.

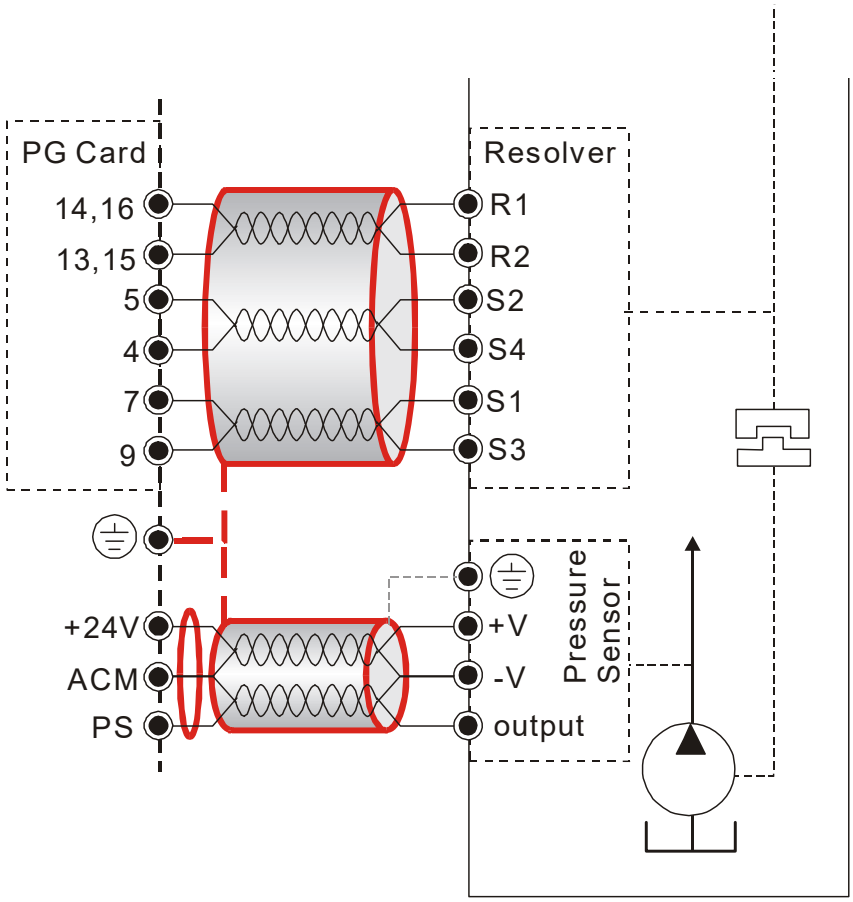

4. If there is any abnormal condition that cannot be solved, please contact the manufacturer.

Step 8. Adjustment of system transient response

- Reduce the pressure rise time, increase Kp1 (Pr.00-20) and reduce the Ki1 time (Pr.00-21)
- For pressure overshoot, increase the Kp3 time (Pr.00-24) and reduce the Ki3 time (Pr.00-25)

3-4 Confluence Machine Tuning Procedure

Wiring according to Chapter 2

Carry out the automatic measurement of the motor's parameters according to Step 1 and Step 2 described above for the Master and Slave, respectively. Then perform the following procedure

Master setting

- Set Pr.03-13 = 1

  Confluence Master/Slave Selection

Setting value of Pr.03-13	0: No function
	1: Master 1
	2: Slave/Master 2
	3: Slave/Master 3

- Set Pr.03-14

  Slave's proportion of the Master's flow

Setting value of Pr.03-14	0.0~6553.5%

- Pr.03-17 can be configured to determine the activation level of the Slave

  Slave's activation level

Setting value of Pr.03-17	0~100%

Slave setting

- Pr.01-01=1 or 2

  Source of operation command

Setting value of Pr. 01-01	0: Operation by using the digital keypad
	1: Operation by using the external terminals. The Stop button on the keypad is disabled.
	2: Communication using RS-485. The Stop button on the keypad is disabled

-

- Set Pr.03-15 = 1

  Source of Frequency Command

Setting value of Pr. 03-15	0: Digital Operation Panel
	1: RS485 Communication
	2~5: reserved
	6: CANopen

- Shut down the power and then supply the power again

  Set an arbitrary value of the frequency command at the Master to check if the Slave has the same value of the frequency command

  Set 10rpm at the Master and then press RUN to see if the Slave is also running. If not, check the wiring or the parameter setting for any problem

- Set Slave Pr.03-13 = 2

  Confluence Master/Slave Selection

Setting value of Pr.03-13	0: No function
	1: Master 1
	2: Slave/Master 2
	3: Slave/Master 3

- Pr.03-21 can be set at the Slave to decide if the Salve is performing the reversed operation for depressurization.

  NOTE: If it is required to reverse the operation for depressurization at the Slave, it is necessary to make sure that the pump outlet port is not installed with a check valve and Pr.03-16 should be set as 500%

Slave reverse operation for depressurization

Setting value of Pr.03-21	0: Disable 1: Enable

Limit for the Slave reverse depressurization torque

Setting value of Pr.03-16	0~500%

- Shut off the power and the re-supply power for the Slave, and then set the Slave in the speed control mode

Speed Control Mode

Setting value of Pr.00-09	0: Speed control 1: Pressure control

In this case, the Master can be tuned according to the Step 3 – Step 8 described above

Set Pr.04-00
COM1 Communication Address

Setting value of Pr.04-00	1~254 (Start from Modbus ID #2 to do the set up.)

- Set Pr.04-27

從站（泵） 錯誤診斷-從站 （泵）數量 (若有分合流切換，以最多站 （泵）合流時的站 （泵）數量做設定）Wrong diagnosis of slave (pump) on the number of the slaves (pumps). If you can switch between confluence and diversion, use the maximum number of slaves (pumps) at confluence to the setting.

Setting value of Pr.04-27	0~20 (0: Disable slave pump diagnosis function)

3-5 Confluence/Diversion Mode Adjustment Procedure

Wiring according to Chapter 2

In a diversion condition, adjust various parameters of the hybrid servo drive according to the Step 1 – Step 8 describe above

In a confluence condition, please refer to the machine adjustment procedure for the confluence operation

Complete the above steps

Set the Master for pressure control mode

- Pr.00-09 = 1 for pressure control mode

  Pressure control mode

Setting value of Pr.00-09	0: Speed control 1: Pressure control

Set the Slave for speed control mode

- Pr.00-09 = 0 for speed control mode

  Speed Control Mode

Setting value of Pr.00-09	0: Speed control 1: Pressure control

- Pr.03-00 ~ Pr.03-02 = 45 confluence/diversion signal input

  Multi-function Input

Setting values of Pr.03-00~03-02	0: No function 45: Confluence/Diversion signal input

- Through the controller, perform the entire confluence/diversion operation.
- New protection mechanism at version C: When Pr.03-00 ~ Pr.03-02 = 45, Pr.01-01 is automatically set as 2 and Pr.03-15 is automatically, set as 1. This is a mechanism to prevent forgetting to set up related parameters and mistakes when setting up parameters.

Chapter 4 Summary of Parameter Settings

00 System Parameters

01 Motor Parameters

02 Protection Parameters

03 Digital / Analog Input / Output Parameters

04 Communication Parameters

05 Special application Parameters

4-1 Summary of Parameters

00 System Parameters

✓ You can set this parameter during operation.

Pr.	Name of Parameter	Setting	Factory Setting	VF	FOCPG	FOCPM
00-00	Hybrid servo drive model code ID	**VJ-A** 12: 230V, 7.5HP 13: 460 V, 7.5HP 14: 230V, 10HP 15: 460V, 10HP 16: 230V, 15HP 17: 460V, 15HP 18: 230V, 20HP 19: 460V, 20HP 20: 230V, 25HP 21: 460V, 25HP 22: 230V, 30HP 23: 460V, 30HP 24: 230V, 40HP 25: 460V, 40HP 26: 230V, 50HP 27: 460V, 50HP 29: 460V, 60HP 31: 460V, 75HP 33: 460V, 100HP **VJ-C** 214: 230V, 40HP 215: 230V, 50HP 410: 460V, 15HP 411: 460V, 20HP 412: 460V, 25HP 413: 460V, 30HP 414: 460V, 40HP 415: 460V, 50HP 416: 460V, 60HP 417: 460V, 75HP 418: 460V, 100HP	Read only	○	○	○
00-01	Display of rated current of the hybrid servo drive	Display the model specific values	Read only	○	○	○
00-02	Reset parameter settings	0: No function 1: Parameter locked 5: Rest the kWh at drive stop 7: Reset CANopen Index 10: Reset to factory setting	0	○	○	○
00-03	Software version	Read only	Read only	○	○	○

	Pr.	Name of Parameter	Setting	Factory Setting	VF	FOCPG	FOCPM
✓	00-04	Selection of multi-function display	0: Display the output current (A) 1: Reserved 2: Display the actual output frequency (H) 3: Display the DC bus voltage (U) 4: Display the output voltage (E) 5: Display the output power angle (n) 6: Display the output power in kW (P) 7: Display the actual motor speed rpm (r) 8: Display the estimated output torque N-m (t) (%) 9: Display the PG feedback (G) 10: Reserved 11: Display the signal value of the analog input terminal PO % (1.) 12: Display the signal value of the analog input terminal PI % (2.) 13: Display the signal value of the analog input terminal AUI % (3.) 14: Display temperature of the heat sink in °C (t.) 15: Display temperature of IGBT in °C (T) 16: The status of digital input (ON/OFF) (i) 17: The status of digital output (ON/OFF) (o) 18: Reserved 19: The corresponding CPU pin status of the digital input (i.) 20: The corresponding CPU pin status of the digital output (o.) 21~24: Reserved 25: Display the signal value of the analog input terminal QI % (5.) 26: Display the actual pressure value (Bar) (b.) 27: Display the kWh value (K) 28: Display the motor temperature (currently only support KTY84) (T.) 29: Overload rate of hybrid servo drive (d.) (unit: %) 30: Over load rate of motor with last digit A of HES. (M.) (unit: %) 31: Display current at braking (A.) (unit: A) 32: Temperature of the braking chopper (4.) (unit: ºC) 33: Reserved 34: Torque constant Kt (K.) 35: Reserved 36: Reserved 37: Reserved 38: Reserved 39: Reserved 40: Reserved 41: # of times to switch on/off of the soft start relays (L) (%) 42: Amount of time to clean the cooling fans (F) %	0	○	○	○
✓	00-05	Reserved					
✓	00-06	Display the speed (rpm) defined by the user	0~39999 rpm	2000	○	○	○

	Pr.	Name of Parameter	Setting	Factory Setting	VF	FOCPG	FOCPM
✓	00-07	Maximum value of the pressure command	0~400Bar	140	○	○	○
✓	00-08	Maximum feedback pressure	0~400 Bar	250	○	○	○
	00-09	Pressure control mode	0:Speed control 1:Pressure control	0	○	○	○
	00-10	Speed bandwidth	1~200Hz	20		○	○
✓	00-11	Pressure feedback filtering time PS	0.000~1.000 second	0.000	○	○	○
✓	00-12	Pressure command filtering time	0.000~1.000 second	0.000	○	○	○
✓	00-13	Flow command filtering time	0.000~1.000 second	0.000	○	○	○
✓	00-14	Percentage of the pressure command (Max)	0.0~100.0%	56.0	○	○	○
✓	00-15	Percentage of the pressure command (Mid)	0.0~100.0%	28.0	○	○	○
✓	00-16	Percentage of the pressure command (Min)	0.0~100.0%	0.0	○	○	○
✓	00-17	Percentage of the flow command (Max)	0.0~100.0%	100.0	○	○	○
✓	00-18	Percentage of the flow command value (Mid)	0.0~100.0%	50.0	○	○	○
✓	00-19	Percentage of the flow command (Min)	0.0~100.0%	0.0	○	○	○
✓	00-20	P (proportional) gain 1	0.0~1000.0	50.0	○	○	○
✓	00-21	I (integration time) 1	0.00~500.00 seconds	2.00	○	○	○
✓	00-22	P (proportional) gain 2	0.0~1000.0	50.0	○	○	○
✓	00-23	I (integration) time 2	0.00~500.00 seconds	2.00	○	○	○
✓	00-24	P (proportional) gain 3	0.0~1000.0	50.0	○	○	○
✓	00-25	I (integration) time 3	0.00~500.00 seconds	2.00	○	○	○
✓	00-26	Pressure stable zone	0~100%	25	○	○	○
✓	00-27	Minimum pressure	0.0~100.0%	0.1	○	○	○
✓	00-28	Depressurization speed	0~100%	25	○	○	○
✓	00-29	Ramp up rate of pressure command	0~1000ms	0	○	○	○

	Pr.	Name of Parameter	Setting	Factory Setting	VF	FOCPG	FOCPM
✓	00-30	Ramp down rate of pressure command	0~1000ms	100	○	○	○
✓	00-31	Ramp up rate of flow command	0~1000 ms	80	○	○	○
✓	00-32	Ramp down rate of flow command	0~1000 ms	80	○	○	○
✓	00-33	Valve opening delay time	0~200 ms	0	○	○	○
	00-34	Output switching function	0.0~100.0% (100.0% is the maximum pressure feedback)	50.0	○	○	○
✓	00-35	Over-pressure detection level	0~400Bar	230	○	○	○
✓	00-36	Detection of disconnection of pressure feedback	0: No function 1: Enable (only for the pressure feedback output signal within 1~5V or 4~20mA)	0	○	○	○
✓	00-37	Differential gain	0.0~100.0 %	0.0	○	○	○
	00-38	Pressure/flow control function selection	Bit 0: 0: Switch the PI Gain according to the pressure feedback level and use single speed bandwidth. 1: Switch the PI Gain and speed bandwidth according to the multi-function input terminal Bit 1: 0: No pressure/flow control switch 1: Switch between the pressure and flow control Bit 2: 0: Use the old pressure overshoot suppression 1: Use the new pressure overshoot suppression Bit 3: 0: Switch the PI Gain and single speed bandwidth according to the pressure feedback level 1: Switch the PI Gain and speed bandwidth according to the pressure command. Bit 8: 0: Switch between the ASR frequency feedbacks Bit 9: 0: Switch between the ASR frequency commands (To use this parameter, you need to convert binary number to decimal.)	0	○	○	○
	00-39	Integral time Pressure overshoot 1	0.00~500.00 sec.	0.20	○	○	○
	00-40	Differential gain 2	0.0~100.0%	0.0			
	00-41	Differential gain 3	0.0~100.0%	0.0			

	Pr.	Name of Parameter	Setting	Factory Setting	VF	FOCPG	FOCPM
	00-42	Pressure overshoot level	0~100%	2	○	○	○
	00-43	Maximum Flow	0~100%	100	○	○	○
	00-44	Pressure Command	0.0~400.0 bar	0.0	○	○	○
	00-45	Flow Rate Command	0.0~100.0%	0.0	○	○	○
✓	00-46	Pressure reference S1 time	0~1000ms	0	○	○	○
✓	00-47	Pressure reference S2 time	0~1000ms	0	○	○	○
✓	00-48	Flow reference S1 time	0~1000ms	0	○	○	○
✓	00-49	Flow reference S2 time	0~1000ms	0	○	○	○
✓	00-50	Speed bandwidth 2	0~40Hz	20	○	○	○
✓	00-51	Speed bandwidth 3	0~40Hz	20	○	○	○
✓	00-52	Overpressure Detecting Time	0.000~1.000sec	0.01	○	○	○
✓	00-53	Oil Shortage Detecting Time	0.0~60.0sec	0.0	○	○	○
✓	00-54	Oil Pump Reverse Running Detecting Time	0.0~60.0sec	0.0	○	○	○
	00-55 ~ 00-58	Reserved					
✓	00-59	Minimum Flow	0.00~ 100.00%	5.00	○	○	○
✓	00-60	Oil Shortage Detecting Time at Startup	0 ~10 min	0	○	○	○
	00-61	Minimum Pressure 2	0.0 ~ 100.0%	0.1	○	○	○
	00-62	Minimum Flow 2	0.00 ~ 100.00%	5.00	○	○	○
	00-63	Pressure Releasing Valve Opening Time Interval	0.000 ~ 0.100 sec	0.100	○	○	○
	00-64 ~ 00-65	For specific customers only	For certain customers only				
	00-66	Multi-flow rate / speed command 1	0.00~599.00Hz	0	○	○	○
	00-67	Multi-flow rate / speed command 2	0.00~599.00Hz	0	○	○	○
	00-68	Multi-flow rate / speed command 3	0.00~599.00Hz	0	○	○	○
	00-69	Multi-flow rate / speed command 4	0.00~599.00Hz	0	○	○	○

Pr.	Name of Parameter	Setting	Factory Setting	VF	FOCPG	FOCPM
00--70	Multi-flow rate / speed command 5	0.00~599.00Hz	0	○	○	○
00-71	Multi-flow rate / speed command 6	0.00~599.00Hz	0	○	○	○
00-72	Multi-flow rate / speed command 7	0.00~599.00Hz	0	○	○	○
00-73 ~ 00-90	For specific customers only	For certain customers only				
00-91	Output quantity of oil pump	0~500 cc / rev 0: Turn off pressure loss detection	0			
00-92	Pressure loss detectiing time	0~60.0 sec 0: Turn off pressure detection	0			
00-93	Pressure limit percentage	0~100%	10			
00-94	Pressure releasing level	0~200%	10			
00-95	Pressure releasing limit	0~400bar	45			

01 Motor Parameters

✓ You can set this parameter during operation.

	Pr.	Name of Parameter	Setting	Factory Setting	VF	FOCPG	FOCPM
	01-00	Control mode	0: VF 1: Reserved 2: Reserved 3: FOCPGIM (Induction Motor) 4: Reserved 5: FOCPGPM (Permanent Motor) 6: Reserved 7: Reserved	5	○	○	○
✓	01-01	Source of operating command	0: Controlled by using the digital keypad 1: Controlled by using the external terminals. The STOP button on the keypad is disabled. 2: Communication using RS-485. The STOP button on the keypad is disabled 3: Controlled by using CANopen	0	○	○	○
	01-02	Motor's maximum operating frequency	50.00~599.00Hz	166.67	○	○	○
	01-03	Motor's rated frequency	0.00~599.00Hz	113.33	○	○	○
	01-04	Motor's rated voltage	230V Models: 0.1V~255.0V 460V Models: 0.1V~510.0V	220.0 440.0	○	○	
✓	01-05	Acceleration time setting	0.00~600.00 seconds	0.00	○	○	○
✓	01-06	Deceleration time setting	0.00~600.00 seconds	0.00	○	○	○
	01-07	Motor Parameter Auto Tuning	0: No function	0	○	○	
			1: Dynamic test for induction motor (IM) (Rs, Rr, Lm, Lx, no-load current)		○	○	
			2: Static test for induction motor (IM)		○	○	
			3: Reserved		○	○	
			4: Measuring the angle between magnetic pole and PG origin by the dynamic test of SPM motor				○
			5: Parameter measurement by the dynamic test of SPM motor (Surface-mounted Permanent Magnet synchronous Motor)				○
			9: Angle measurement between magnetic pole and PG origin and parameter measurement by the dynamic test of SPM motor.				
			13: Dynamic test for IPM motor (Interior permanent magnet synchronous motor)				
			14: Correction of pressure feedback offset				

	Pr.	Name of Parameter	Setting	Factory Setting	VF	FOCPG	FOCPM
	01-08	Rated current of the induction motor (A)	40~120% of the drive's rated current	#.##		○	
✓	01-09	Rated power of the induction motor	0~655.35kW	#.##		○	
✓	01-10	Rated speed of the induction motor	0~65535rpm 1710 (60Hz 4-pole); 1410 (50Hz 4-pole)	1710		○	
	01-11	Number of poles of the induction motor	2~20	4		○	
	01-12	No-load current of the induction motor (A)	0~Default value of Pr.01-08	#.##		○	
	01-13	Stator resistance (Rs) of the induction motor	0~65.535Ω	0		○	
	01-14	Rotor resistance (Rr) of the induction motor	0~65.535Ω	0		○	
	01-15	Magnetizing inductance (Lm) of the induction motor	0.0~6553.5mH	0		○	
	01-16	Total leakage inductance (Lx) of the induction motor	0.0~6553.5mH	0		○	
	01-17	Rated current of the synchronous motor	0.00~655.35 Amps	We've set up Pr.01-17 to Pr.01-24 of each hybrid servo drive before shipping them to you.			○
	01-18	Rated power of the synchronous motor	0.00~655.35kW				○
	01-19	Rated speed of the synchronous motor	0~65535rpm				○
	01-20	Number of poles of the synchronous motor	2~20				○
	01-21	Inertia of the synchronous motor's rotor	0.0~6553.5 $*10^{-4}$ $kg.m^2$				○
	01-22	Stator's phase resistance (Rs) of the synchronous motor	0.000~65.535Ω				○

	Pr.	Name of Parameter	Setting	Factory Setting	VF	FOCPG	FOCPM
	01-23	Stator's phase inductance (Ld) of the synchronous motor	0.00~655.35mH				○
	01-24	Stator's phase inductance (Lq) of the synchronous motor	0.00~655.35mH				○
	01-25	Back EMF of the synchronous motor	0~65535 V/ krpm	0			○
	01-26	Encoder type	3: Resolver	3			○
	01-27	PG Offset angle of synchronous motor	0.0~360.0°	0.0			○
	01-28	Number of poles of the resolver	1~5	1			○
	01-29	Encoder pulse	1~20000	1024		○	○
	01-30	Encoder's input type setting	0: No function 1: Phase A leads in a forward run command and phase B leads in a reverse run command 2: Phase B leads in a forward run command and phase A leads in a reverse run command 3: Phase A is a pulse input and phase B is a direction input. (low input=reverse direction, high input=forward direction) 4: Phase A is a pulse input and phase B is a direction input. (low input=forward direction, high input=reverse direction) 5: Single-phase input	1		○	○
	01-31	System control	0: No function 1: ASR automatic tuning 2: Estimation of inertia	1		○	○
✓	01-32	Unity value of the system inertia	1~65535 (256 = 1 per unit)	260		○	○
	01-33	Carrier frequency (VJ-A)	4k~10kHz	5	○	○	○
	01-33	Carrier Frequency (VJ-C)	4k~10 kHz	5			
✓	01-34	Reserved					
	01-35	Motor ID#	0: No Function See 4-2 Description of Parameter Settings for more information	0			

Pr.	Name of Parameter	Setting	Factory Setting	VF	FOCPG	FOCPM
01-36	Change the running direction	0: When the drive runs **forward,** the motor rotates **counterclockwise.** When the drive runs **reversely**, the motor rotates **clockwise**. 1: When the drive runs **forward,** the motor rotates **clockwise**. When the drive runs **reversely**, the motor rotates **counterclockwise**	0			
01-37	HES ID #	0: No Function See 4-2 Description of Parameter Settings for more information	0			
01-38	Maximum Output Voltage	0~110%	100%	○	○	○
01-39	PDFF (Speed overshoot suppression parameter)	0~200	100			

02 Protection Parameters

✓ You can set this parameter during operation.

	Pr.	Name of Parameter	Setting	Factory Setting	VF	FOCPG	FOCPM
✓	02-00	Software brake level	230V models: 350.0~450.0V_{DC} 460V models: 700.0~900.0V_{DC}	380.0 760.0	○	○	○
	02-01	Fault record 1	0: No error record	0	○	○	○
	02-02	Fault record 2	1: Over-current during acceleration (ocA)	0	○	○	○
	02-03	Fault record 3	2: Over-current during deceleration (ocd)	0	○	○	○
	02-04	Fault record 4	3: Over-current during constant speed (ocn)	0	○	○	○
	02-05	Fault record 5	4: Ground fault (GFF)	0	○	○	○
	02-06	Fault record 6	5: IGBT short-circuit (occ)	0	○	○	○
			6: Over-current at stop (ocS)		○	○	○
			7: Over-voltage during acceleration (ovA)		○	○	○
			8: Over-voltage during deceleration (ovd)		○	○	○
			9: Over-voltage during constant speed (ovn)		○	○	○
			10: Over-voltage at stop (ovS)		○	○	○
			11: Low-voltage during acceleration (LvA)		○	○	○
			12: Low-voltage during deceleration (Lvd)		○	○	○
			13: Low-voltage during constant speed (Lvn)		○	○	○
			14: Low-voltage at stop (LvS)		○	○	○
			15: Phase loss protection (orP)		○	○	○
			16: IGBT over-heat (oH1)		○	○	○
			17: Heat sink over-heat for 40HP and above (oH2)		○	○	○
			18: TH1 open: IGBT over-heat protection circuit error (tH1o)		○	○	○
			19: TH2 open: heat sink over-heat protection circuit error (tH2o)		○	○	○
			20: IGBT over heated and unusual fan function (oHF)		○	○	○
			21: Hybrid servo drive overload (oL)		○	○	○
			22: Motor over-load (EoL1)		○	○	○
			23: Reserved				
			24: Motor over-heat (oH3)		○	○	○
			25: Reserved				
			26: Reserved		○	○	○
			27: Reserved		○	○	○
			28: Reserved		○	○	○
			29: Reserved		○	○	○
			30: Memory write error (cF1)		○	○	○

Pr.	Name of Parameter	Setting	Factory Setting	VF	FOCPG	FOCPM
		31: Memory read error (cF2)		○	○	○
		32: Isum current detection error (cd0)		○	○	○
		33: U-phase current detection error (cd1)		○	○	○
		34: V-phase current detection error (cd2)		○	○	○
		35: W-phase current detection error (cd3)		○	○	○
		36: Over- current detection error (Hd0)		○	○	○
		37: Over-current detection error (Hd1)		○	○	○
		38: Over-voltage detection error (Hd2)		○	○	○
		39: Ground current detection error (Hd3)		○	○	○
		40: Auto tuning error (AuE)			○	○
		41: Reserved		○	○	○
		42: PG feedback error (PGF1)			○	○
		43: PG feedback loss (PGF2)			○	○
		44: PG feedback stall (PGF3)			○	○
		45: PG slip error (PGF4)			○	○
		46: Reserved		○	○	○
		47: Reserved		○	○	○
		48: Reserved				
		49: External fault input (EF)		○	○	○
		50: Emergency stop (EF1)		○	○	○
		51: Reserved				
		52: Password error (Pcod)		○	○	○
		53: CPU error (ccod) (VJ-C)		○	○	○
		54: Communication error (wrong command)(cE1)		○	○	○
		55: Communication error (wrong data address) (cE2)		○	○	○
		56: Communication error (wrong data value) (cE3)		○	○	○
		57: Communication error (wrong data written address) (cE4)		○	○	○
		58: RS-485 Communication time out (cE10)		○	○	○
		59: Reserved		○	○	○
		60: Braking transistor error (bF)		○	○	○
		61~63: Reserved		○	○	○
		64: Reserved		○	○	○
		65: PG card information error or magnetic pole angle tuning error (PGF5)				○

Pr.	Name of Parameter	Setting	Factory Setting	VF	FOCPG	FOCPM
		66: Overpressure (ovP)		○	○	○
		67: Pressure feedback fault (PfbF)		○	○	○
		68: Oil pump runs reversely (Prev)				
		69: Oil shortage (noil)				
		70: Reserved				
		71: Over current at Braking chopper (ocbs)				
		72: Braking resistor is open-circuit (bro)				
		73: Resistance of braking resistor is too small (brF)				
		74: Braking chopper overheated (oH4)				
		75: Error occurred on Brake chopper's thermal protection line (tH4o)				
		76~81: Reserved				
		82: Output Phase Loss on Phase U (oPL1)				
		83: Output Phase Loss on Phase V (oPL2)				
		84: Output Phase Loss on Phase W (oPL3)				
		85, 86, 88~100: Reserved				
		87: Hybrid servo drive overloading while running at low frequency (oL3)				
		90: Slave (pump) error, alarm on the master (pump) (SLE)				
		101: Software error 1 occurred on CANopen (CGdE)				
		102: Software error 2 occurred on CANopen (CHbE)				
		103: Reserved				
		104: Hardware error occurred on CANopen (CbFE)				
		105: Index setting error occurred on CANopen (CIdE)				
		106: Slave # setting error occurred on CANopen (CAdE)				
		107: CANopen index is out of range (CFrE)				
✓ 02-07	Low voltage level	160.0~220.0V_{DC} 320.0~440.0V_{DC}	180.0 360.0	○	○	○
✓ 02-08	PTC action selection	0: Warn and keep operation 1: Warn and ramp to stop 2: Warn and coast to stop	1	○	○	○

	Pr.	Name of Parameter	Setting	Factory Setting	VF	FOCPG	FOCPM
✓	02-09	PTC level	0.0~150.0°C	VJ-A: 120°C; VJ-C: 140°C	○	○	○
✓	02-10	Reserved					
✓	02-11	PTC type	0: Not assigned 1: KTY84-130 2: PTC130 3: Switch (N.C. model) 4: PT1000	0	○	○	○
✓	02-12	Motor fan activation level	0.0~150.0°C	50.0	○	○	○
✓	02-13	Electronic thermal relay selection 1	0: Inverter motor (Separate heat dissipating, the cooling fan and the rotating shaft are not synchronized) 1: Standard motor (In-lined heat dissipating, the cooling fan and the rotating shaft are synchronized) 2: Disable	2	○	○	○
✓	02-14	Electronic thermal characteristic for motor	30.0~600.0 seconds	60.0	○	○	○
	02-15	Output frequency at malfunction	0.00~599.00 Hz	Read only	○	○	○
	02-16	Output voltage at malfunction	0.0~6553.5 V	Read only			
	02-17	Output of DC side voltage at malfunction	0.0~6553.5 V	Read only	○	○	○
	02-18	Output Current at malfunction	0.00~655.35 Amp	Read only	○	○	○
	02-19	IGBT temperature at malfunction	0.0~6553.5 ºC	Read only	○	○	○
	02-20	Auto-Reset LvX error	0: Disable, 1: Enable	0	○	○	○
	02-21	Decode the parameter protection with the password	0~9998	0	○	○	○
	02-22	Set up a parameter protection password	0~9998, 1000~65535	0	○	○	○
	02-23 ~ 02-31	Reserved					
	02-32	Frequency Command at malfunction	0.00 ~ 599.00 Hz	Read only	○	○	○
	02-33	Capacitor's temperature at malfunction	-3276.7~3276.7 ºC	Read only	○	○	○

Pr.	Name of Parameter	Setting	Factory Setting	VF	FOCPG	FOCPM
02-34	Motor's rotating speed at malfunction	-3276.7~3276.7RPM	Read only	○	○	○
02-35	Torque command at malfunction	-3276.7~3276.7%	Read only	○	○	○
02-36	Input Terminals' Status at malfunction	0 ~ 65535	Read only	○	○	○
02-37	Output Terminals' Status at malfunction	0 ~ 65535	Read only	○	○	○
02-38	Hybrid servo drive's status at malfunction	0 ~ 65535	Read only	○	○	○
02-39	Detecting Braking Resistor at startup	0: Disable, 1: Enable	1	○	○	○
02-40	Braking resistance	0.0 ~ 6553.5Ω	0.0	○	○	○
02-41	Limit of current	0 ~ 250%	200			
02-42	Maintenance period of the soft-start relay	0 ~ 65535 (X10) 0: Turn off the reminder of the remaining lifespan of the soft-start relay.	0			
02-43	Maintenance period of the cooling fan.	0 ~ 65535 hour 0: Turn off the reminder of the remaining maintenance hour of the cooling fan.	0			
02-47	Feedback slip detection time	0.0~10.0 sec	0.5			

03 Digital/Analog Input/ Output Parameters

✓ You can set this parameter during operation.

	Pr.	Name of Parameter	Setting	Factory Setting	VF	FOCPG	FOCPM
	03-00	Multi-function input command 3 (MI3)	0: No function 44: Injection signal input 45: Confluence/Diversion signal input 46: Hybrid servo drive runs backward 47: Multi-level pressure PI command 1 48: Multi-level pressure PI command 2 51: Flow rate mode 52: Multi-flow rate / speed command 1 53: Multi-flow rate / speed command 2 54: Multi-flow rate / speed command 3	0	○	○	○
	03-01	Multi-function input command 4 (MI4)		0	○	○	○
	03-02	Multi-function input command 5 (MI5)		0	○	○	○
✓	03-03	Digital input response time	0.001~ 30.000 sec	0.005	○	○	○
✓	03-04	Digital input operation direction	0～65535	0	○	○	
✓	03-05	Multi-function output 1 (Relay 1)	0: No function 1: Operation indication 9: Hybrid servo drive is ready 11: Error indication 44: Displacement switch signal 45: Motor fan control signal 46: Pressure release valve control signal	11	○	○	○
✓	03-06	Multi-function Output 2 (MO1)		0	○	○	○
✓	03-07	Multi-function Output 3 (MO2)		0	○	○	○
✓	03-08	Multi-function output Direction	0～65535	0		○	
✓	03-09	Display low-pass filter time on the keypad	0.001~65.535 seconds	0.100	○	○	○
	03-10	Maximum output voltage for pressure feedback	5.00~10.00 V	10.00	○	○	○
	03-11	Minimum output voltage for pressure feedback	0.00~2.00 V	0.00	○	○	○
✓	03-12	Current/Voltage type pressure sensor selection	0: Current mode 1: Voltage mode	1	○	○	○
	03-13	Confluence Master/Slave Selection	0: No function 1: Master 1 2: Slave/Master 2 3: Slave/Master 3	0	○	○	○
	03-14	The ratio between slave's flow and master's flow	0.0~65535.5 %	100.0	○	○	○

	Pr.	Name of Parameter	Setting	Factory Setting	VF	FOCPG	FOCPM
✓	03-15	Source of frequency command	0: Digital keypad 1: RS485 Communication 2~5: Reserved 6: CANopen	0	○	○	○
✓	03-16	Limit for the Slave reverse depressurization torque	0~500%	20	○	○	○
✓	03-17	Slave's activation level	0.0~100.0%	50.0	○	○	○
	03-18	Reserved					
	03-19	Reserved					
✓	03-20	Start-up display selection	0: F (frequency command) 1: H (actual frequency) 2: Multi-function display (user-defined 00-04) 3: A (Output current)	0	○	○	○
✓	03-21	Slave reverse operation for depressurization	0: Disabled 1: Enabled 2: Reserved	0	○	○	○
✓	03-22	Slave closing level	0 ~400bar	400	○	○	○
	03-23	Reserved					
	03-24	Reserved					
	03-25	Reserved					
	03-26	AFM1 Multi-function output 1	0: Output frequency (Hz) 1: Frequency command (Hz) 2: Motor rotation speed 3: Output current 4: Output voltage 5: DC bus voltage 6: Power factor 7: Power 8: Output torque 9: AVI 10: ACI 11: AUI 12~17: Reserved 18: IGBT temperature 19: Maximum frequency 20: Pressure feedback	20			
	03-27	AFM1 Analogue output gain	0.0~500.0% (Set up this parameter to adjust the analogue signal sent from the AFM output terminal to the voltage level of an analogue multimeter)	100			
	03-28	Enable AFM1 analogue reverse output	0: Output absolute voltage. 1: Reverse output 0V; Forward output 0~10V. 2: Reverse output: 0~5 V; Forward output	0			

Pr.	Name of Parameter	Setting	Factory Setting	VF	FOCPG	FOCPM
		5~10 V.				
03-29	AFM2 Multi-output function 2	Same setting as Pr.03-26.	0			
03-30	AFM2 Analogue output gain	0.0~500.0% (Set up this parameter to adjust the analogue signal sent from the AFM output terminal to the voltage level of an analogue multimeter)	100			
03-31	Enable AFM2 analogue reverse output	0: Output absolute voltage. 1: Reverse output 0V; Forward output 0~10V. 2: Reverse output: 0~5 V; Forward output 5~10 V.	2			

04 Communication Parameters

✓ You can set this parameter during operation.

	Pr.	Name of Parameter	Setting	Factory Setting	VF	FOCPG	FOCPM
✓	04-00	Communication address	1~254	1	○	○	○
✓	04-01	COM transmission speed	4.8~115.2 Kbps	19.2	○	○	○
✓	04-02	COM transmission fault treatment	0: Warn and continue operation 1: Warn and ramp to stop 2: Warn and coast to stop 3: No warning and continue operation	3	○	○	○
✓	04-03	COM time-out detection	0.0~100.0 sec.	0.0	○	○	○
✓	04-04	COM1 communication protocol	0: 7N1 (ASCII) 1: 7N2 (ASCII) 2: 7E1 (ASCII) 3: 7O1 (ASCII) 4: 7E2 (ASCII) 5: 7O2 (ASCII) 6: 8N1 (ASCII) 7: 8N2 (ASCII) 8: 8E1 (ASCII) 9: 8O1 (ASCII) 10: 8E2 (ASCII) 11: 8O2 (ASCII) 12: 8N1 (RTU) 13: 8N2 (RTU) 14: 8E1 (RTU) 15: 8O1 (RTU) 16: 8E2 (RTU) 17: 8O2 (RTU)	13	○	○	○
✓	04-05	Delay time of communication response	0.0~200.0 ms	2.0	○	○	○
	04-06	Main frequency of the communication	0.00~ 599.00 Hz	60.00	○	○	○
✓	04-07	Block transfer 1	0.00~655.35	0.00	○	○	○
✓	04-08	Block transfer 2	0.00~655.35	0.00	○	○	○
✓	04-09	Block transfer 3	0.00~655.35	0.00	○	○	○
✓	04-10	Block transfer 4	0.00~655.35	0.00	○	○	○
✓	04-11	Block transfer 5	0.00~655.35	0.00	○	○	○
✓	04-12	Block transfer 6	0.00~655.35	0.00	○	○	○
✓	04-13	Block transfer 7	0.00~655.35	0.00	○	○	○
✓	04-14	Block transfer 8	0.00~655.35	0.00	○	○	○
✓	04-15	Block transfer 9	0.00~655.35	0.00	○	○	○
✓	04-16	Block transfer 10	0.00~655.35	0.00	○	○	○
	04-17	CANopen slave address	0: Disable 1~127	0	○	○	○

Pr.	Name of Parameter	Setting	Factory Setting	VF	FOCPG	FOCPM
04-18	CANopen speed	0: 1 Mbps 1: 500 Kbps 2: 250 Kbps 3: 125 Kbps 4: 100 Kbps (Delta only) 5: 50 Kbps	0	○	○	○
04-19	CANopen warning record	bit 0: CANopen Guarding Time out bit 1: CANopen Heartbeat Time out Bit 2: CANopen SYNC Time out bit 3: CANopen SDO Time out bit 4: CANopen SDO buffer overflow bit 5: CAN bus Off bit 6: Error protocol of CANopen bit 8: The setting value of CANopen index failed bit 9: The setting value of CANopen address failed bit10: The checksum value of CANopen index failed	0	○	○	○
04-20	CANopen decoding method	0: Delta defined decoding method 1: CANopen Standard DS402 protocol	1	○	○	○
04-21	CANopen communication status	0: Node reset state 1: Com reset state 2: Boot up state 3: Pre-operation state 4: Operation state 5: Stop state	0	○	○	○
04-22	CANopen control status	0: Not ready for use state 1: Inhibit start state 2: Ready to switch on state 3: Switched on state 4: Enable operation state 7: Quick stop active state 13: Error reaction activation state 14: Error state	0	○	○	○
04-23	Reserved					
04-24	Communication decoding method	0: Decoding method 1 (20xx) 1: Decoding method 2 (60xx)	1	○	○	○

04-25	CAN: multi-pump application mode	0: EST master broadcasting mode (single master-multiple slaves) 1: EST multiple master mode (dual master-dual slave)	0			
04-26	CAN: customized third-party controller definition	0: Disable customized protocol 1: Enable KEBA customized protocol 2: Enable EST customized protocol	0			
04-27	Incorrect diagnosis of slave (pumps) on the number of slave (pumps).	0~20 0: Disable the slave (pump) diagnosis function.	0			

05 Special application parameters

✓ You can set this parameter during operation.

Pr.	Name of Parameter	Setting	Factory Setting	VF	FOCPG	FOCPM
05-00	Flow rate rising time at flow rate mode	0~1000ms	80			
05-01	Flow rate decreasing time at flow rate mode	0~1000ms	80			
05-02	Switching point of ASR low speed	0.00~160.00Hz	5.00			
05-03	Switching point of ASR high speed	0.00~160.00Hz	10.00			
05-04	Low speed bandwidth	1~200Hz	20			
05-05	Low speed ASR gain	0~40	10			
05-06	Low speed ASR integral time	0.001~10.000	0.100			
05-07	High speed bandwidth	1~200Hz	20			
05-08	High speed ASR gain	0~40	10			
05-09	High speed ASR integral time	0.001~10.000	0.100			
05-10	Pressure variation detection level	0.0~100.0	0.0			

4-2 Description of Parameter Settings

00 System Parameters

✓ You can set this parameter during operation.

00-00 Hybrid servo drive model code ID

Control mode **VF** **FOCPG** **FOCPM** Factory setting: Read only

Settings Read only

00-01 Display of rated current of the hybrid servo drive

Control mode **VF** **FOCPG** **FOCPM** Factory setting: Read only

Settings Read only

📖 Pr.00-00 is to determine the capacity of the hybrid servo motor, which has been configured in this parameter in factory. In addition, the current value of Pr.00-01 can be read out to check if it is the rated current of the corresponding model. Display value of the current value of Pr.00-01 for the related Pr.00-00.

230V Models								
Power (KW)	5.5	7.5	11	15	18.5	22	30	37
Horse Power (HP)	7.5	10	15	20	25	30	40	50
Model ID	12	14	16	18	20	22	214	215

460V Models											
Power (KW)	5.5	7.5	11	15	18.5	22	30	37	45	55	75
Horse Power (HP)	7.5	10	15	20	25	30	40	50	60	75	100
Model ID	13	15	410	411	412	413	414	415	416	417	418

00-02 Reset parameter settings

Control mode **VF** **FOCPG** **FOCPM** Factory setting: 0

Settings
0: No function
1: Parameter Locked
5: Rest the kWh at drive stop
7: Reset CANopen index
10: Reset all the parameters to factory setting

00-03 Software version

Control mode **VF** **FOCPG** **FOCPM** Factory setting: #. ##

Settings Read only

✓ 00-04 Selection of multi-function display

Control mode **VF** **FOCPG** **FOCPM** Factory setting: 0

Settings
0: Display the output current (A)
1: Reserved
2: Display the actual output frequency (H) (unit: Hz)
3: Display the DC bus voltage (U) (unit: V)
4: Display the three-phase U, V, W output voltage (E) (unit: V)
5: Display the three-phase U, V, W output power angle (n) (unit: deg)

6: Display the output power in kW (P)

7: Display the actual motor speed in rpm estimated by the motor drive or encoder's feedback.
(r 00: forward speed; - 00: negative speed) (unit: rpm)

8: Display the estimated output torque N-m (t 0.0: positive torque; - 0.0: negative torque) (unit: %)

9: Display the PG feedback (G) (unit: PLS)

10: Reserved

11: Display the signal value of the analog input terminal PS with 0~10V mapped to 0~100% (unit: %)

12: Display the signal value of the analog input terminal PI with 0~10V mapped to 0~100% (unit: %)

13: Display the signal value of the analog input terminal AUI with -10~10V mapped to 0~100% (unit: %)

14: Display temperature of the power module IGBT in °C (t.)

15: Display temperature of the power capacitor °C

16: The status of digital input (ON/OFF)

17: The status of digital output (ON/OFF)

18: Reserved

19: The corresponding CPU pin status of the digital input

20: The corresponding CPU pin status of the digital output

21~24: Reserved

25: Display the signal value of the analog input terminal QI with 0~10V mapped to 0~100% (unit: %)

26: Display the actual pressure value (unit: Bar)

27: Display the kWh value (unit: kWh)

28: Display the motor temperature in °C (currently only support KTY84)

29: Over load rate of hybrid servo drive (d.) (unit: %)

30: Over load rate of motor with last digit A of HES, get EOL1 at 100% (M.) (unit: %)

31: Display current at braking (A.) (unit: A)

32: Display temperature of the braking chopper (4.)

(unit: ºC)

33: Reserved

34: torque constant KT (unit: K)

37: Reserved

38: Reserved

39: Reserved

41: # of times to switch on/off of the soft start relays (L) (%)

42: Amount of time to clean the cooling fans (F) %

This parameter defines the contents to be displayed in the U page of the digital keypad KPVJ-LE02 (as shown in the figure).

00-05 Reserved

00-06 Display the speed (rpm) defined by the user

Control mode **VF** **FOCPG** **FOCPM** Factory setting: 2500

Settings 0~39999 rpm

Set the maximum speed of the motor corresponding to the 100% flow.

When the control mode is FOCPM (Pr.01-00=5), Pr.00-06 will follow the setting at Pr.01-20<Number of poles of the synchronous motor> to modify Pr.01-02<Motor's maximum operating frequency>. frequency = rpm*Pole/120

00-07 Maximum value of the pressure command

Control mode **VF** **FOCPG** **FOCPM** Factory setting: 140

Settings 0~400Bar

The 0~10V for the pressure command on the controller is mapped to 0~the value of this parameter.

When you set up Pr.00-07and Pr.00-08, these two parameters Pr.00-14 and Pr.00-15 will also be modified automatically. However, when the pressure command is bigger than the pressure feedback, Pr.00-07 cannot be set up.

Only when Pr.00-07 is smaller than Pr.00-08, you can set Pr.00-07 while the hybrid servo drive is running, .

00-08 Maximum pressure feedback value

Control mode **VF** **FOCPG** **FOCPM** Factory setting: 250

Settings 0~400Bar

The 0~10V for the pressure sensor is mapped to 0~the value of this parameter.

00-09 Pressure control mode

Control mode **VF** **FOCPG** **FOCPM** Factory setting: 0

Settings 0: Speed control

1: Pressure control

This parameter determines the control mode of the hybrid servo drive. It is recommended to use the speed control at the initial startup. After the motor, pump, pressure sensor, and the entire system are checked without any error, switch to the pressure control mode to enter the process control.

In pressure control (Pr.00-09=1), it is necessary to set bot Pr.01-05 (Acceleration time setting) and Pr.01-06 (Deceleration time setting) as zero, or it will affect the stability of pressure control

00-10 Speed bandwidth

Control mode **FOCPG FOCPM** Factory setting: 20

Settings 0~40Hz

Set the speed response. The larger value indicates the faster response.

00-50 Speed Bandwidth 2

Control mode **FOCPG FOCPM** Factory setting: 20

Settings 0 ~ 40Hz

00-51 Speed bandwidth 3

Control mode **FOCPG FOCPM** Factory setting: 20

Settings 0 ~ 40Hz

Set the speed response. The larger value indicates the faster response.

00-11 Pressure feedback filtering time PS
00-12 Pressure feedback filtering time PI
00-13 Pressure feedback filtering time QI

Control mode **VF FOCPG FOCPM** Factory setting: 0.000

Settings 0.000~1.000 seconds

Noises may reside in the analog input signals of the control terminals PS, PI, and QI. The noise may affect the control stability. Use an input filter to eliminate such noise.

If the time constant is too large, a stable control is obtained with poorer control response. If it is too small, a fast response is obtained with unstable control. If the optimal setting is not known, adjust it properly according to the instability or response delay.

00-14 Percentage for the pressure command value (Max)

Control mode **VF FOCPG FOCPM** Factory setting: 56.0

Settings 0.0~100.0%

00-15 Percentage for the pressure command value (Mid)

Control mode **VF FOCPG FOCPM** Factory setting: 28.0

Settings 0.0~100.0%

00-16 Percentage for the pressure command value (Min)

Control mode **VF FOCPG FOCPM** Factory setting: 0.0

Settings 0.0~100.0%

When setting maximum value for the pressure command (Pr.00-07) and maximum pressure feedback value (Pr.00-08), Percentage for the pressure command value (Pr.00-14) and (Pr.00-15) will be revised as well; it cannot be set when pressure command is higher than pressure feedback value.

Pr.00-07 can be changed when the drive is in operation, but it can be set when Pr.00-07 is lower than Pr.00-08.

To set these parameters, it is necessary to set Pr.00-09 = 1.

Set Pr.00-04 = 12 for PI input voltage.

Send the maximum pressure command through the controller and then check the multi-function display page to enter this value into Pr.00-14.

Send a half pressure command through the controller and then check the multi-function display page to enter this value into Pr.00-15.

Send the minimum pressure command through the controller and then check the multi-function display page to enter this value into 00-16.

Example: If the pressure sensor indicates 250bar at 10V. If the controller's maximum pressure of 140bar corresponds to 10V, then Pr.00-07=140. Set the pressure as 140bar by using the controller, the voltage value shown on the display is about 56.0 (140/250 * 100%). Enter this value into the Pr.00-14. Then set the pressure as 70bar on the controller, and now the value displayed on the keypad is about 28.0 (70/250 * 100%). Enter this value to the Pr.00-15. Then set the pressure as 0 bar on controller, and the voltage value shown on the keypad is about 0.0 (0/250 * 100%). Enter this value in the Pr.00-16.

00-17 Percentage for the flow command value (Max)

Control mode	**VF**	**FOCPG**	**FOCPM**	Factory setting: 100.0
	Settings	0.0～100.0%		

00-18 Percentage for the flow command value (Mid)

Control mode	**VF**	**FOCPG**	**FOCPM**	Factory setting: 50.0
	Settings	0.0～100.0%		

00-19 Percentage for the flow command value (Min)

Control mode	**VF**	**FOCPG**	**FOCPM**	Factory setting: 0.0
	Settings	0.0～100.0%		

Set Pr.00-09 =1 before setting Pr.00-17, Pr.00-18 and Pr.00-19.

Set Pr.00-04 = 25 for QI input voltage.

Send the 100% flow rate through the controller and then check the multi-function display page to enter this value into Pr.00-17.

Send the 50% flow rate through the controller and then check the multi-function display page to enter this value into Pr.00-18.

Send the 0% flow rate through the controller and then check the multi-function display page to enter this value into Pr.00-19.

00-20 P gain 1
00-22 P gain 2
00-24 P gain 3

Control mode	**VF**	**FOCPG**	**FOCPM**	Factory setting: 50.0
	Settings	0.0～1000.0		

00-21 I integration time 1
00-23 I integration time 2
00-25 I integration time 3

Control mode	**VF**	**FOCPG**	**FOCPM**	Factory setting: 2.00
	Settings	0.00 – 500.00 seconds		

00-37 Differential gain
00-40 Differential gain 2
00-41 Differential gain 3

Control mode **VF** **FOCPG** **FOCPM** Factory setting: 0.0

Settings 0.0~100.0 %

This parameter is functional only when Bit0 and Bit2 = 1 at Pr.00-38.

00-26 Pressure stable zone

Control mode **VF** **FOCPG** **FOCPM** Factory setting: 25

Settings 0～100%

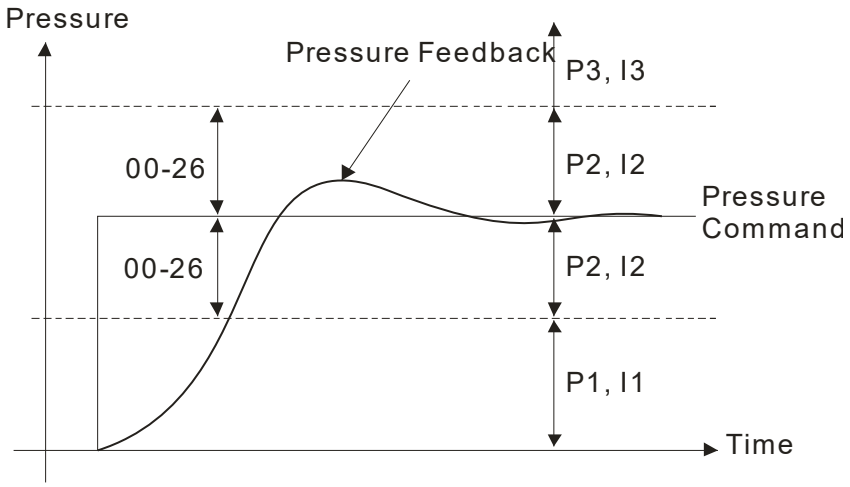

Adjust the Kp value to a proper level first, and then adjust the Ki value (time). If the pressure has overshoot, adjust the kd value.

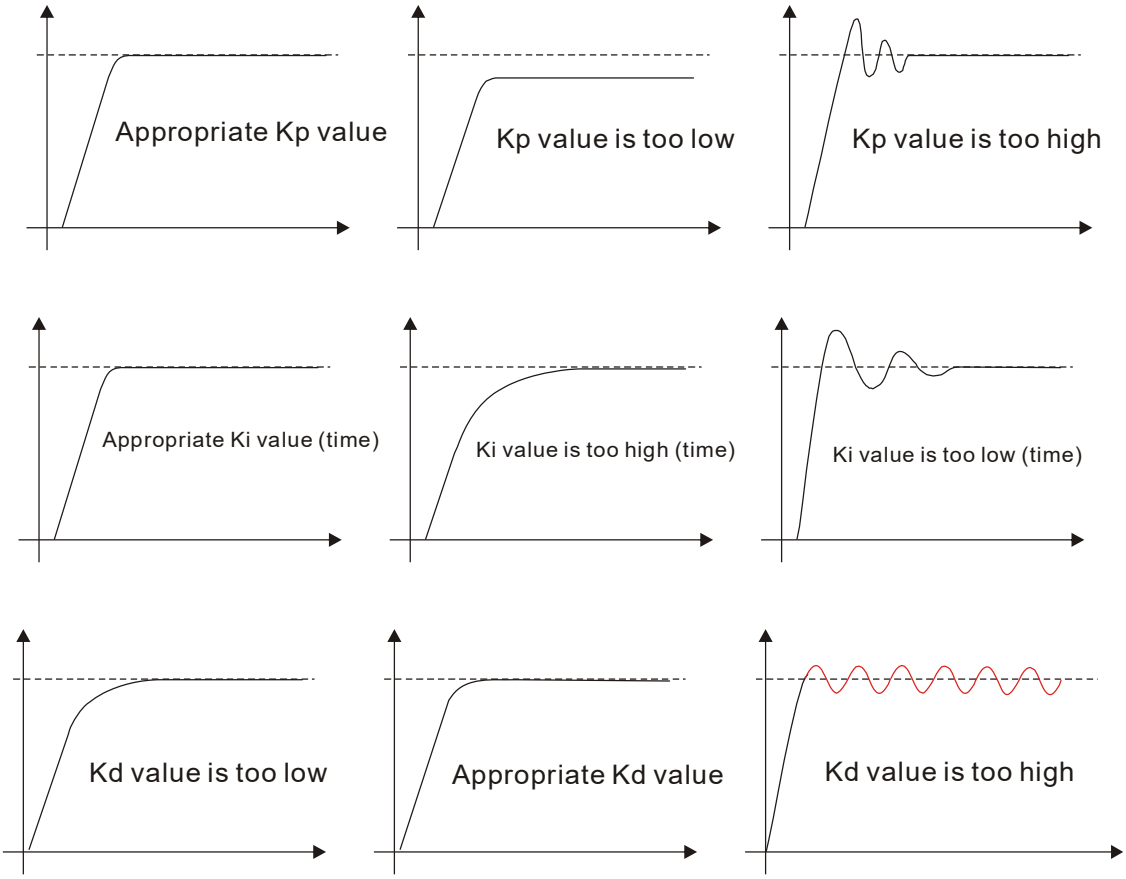

00-27 Minimum pressure

Control mode **VF** **FOCPG** **FOCPM** Factory setting: 0.1

Settings 0.0～100.0%

- Set the minimum pressure value 100% corresponding to Pr.00-08
- Maintain a minimum pressure to ensure that the oil pipe is in fully filled condition to avoid the activation delay of the cylinder when a pressure/flow command is activated.

00-55 Minimum flow

Control mode **VF** **FOCPG** **FOCPM** Factory setting: 5.0

Settings 0.00 ~ 100.00%

- The setting at Pr.00-08 is the setting of Pr.00-27 at 100%. The setting at Pr.01-02 is the setting of Pr.00-55 at 100%.
- A minimum pressure must be maintained to ensure the oil circuit is full at all to time. This will prevent delay of oil tank activation when receiving a pressure/ flow rate command.
- When the pressure command is 0, keep the minimum pressure (Setting value of Pr.00-27).
- When the pressure command is below the minimum pressure but over 0.7bar, the hybrid servo drive follows the pressure command to do control. For example, when the pressure command is 1 bar, the hybrid servo drive follows this command to keep the pressure at 1 bar.
- When the pressure command is lower than 0.7bar, the hybrid servo drive keeps the minimum pressure.

00-28 Depressurization speed

Control mode **VF** **FOCPG** **FOCPM** Factory setting: 25

Settings 0～100%

- Set the highest rotation speed at depressurization. The 100% value is mapped to Pr.01-02 (the maximum rotation speed of the motor).

00-29 Ramp up rate of pressure command

Control mode **VF** **FOCPG** **FOCPM** Factory setting: 0

Settings 0~1000ms

00-30 Ramp down rate of pressure command

Control mode **VF** **FOCPG** **FOCPM** Factory setting: 100

Settings 0~1000ms

- Ramp the pressure value for the pressure command to reduce the vibration of the machine.
- Set the time required for ramping the pressure from 0 ~the maximum pressure (Pr.00-08).

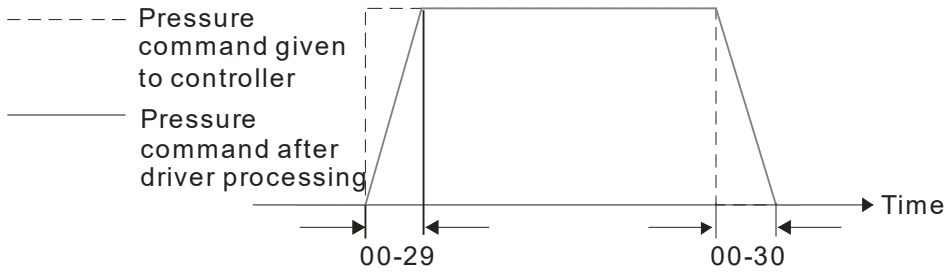

00-31 Ramp up rate of flow command
00-32 Ramp down rate of flow command

Control mode **VF** **FOCPG** **FOCPM** Factory setting: 80

Settings 0~1000ms

- Ramp the flow value for the flow command to reduce the vibration of the machine.
- Set the time required for ramping the flow from 0 ~the maximum flow (Pr.01-02).

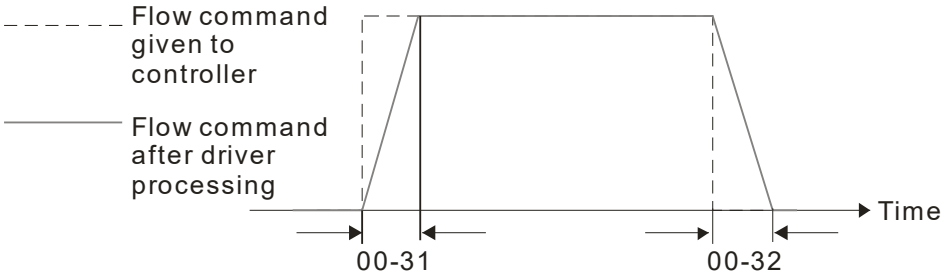

00-33 Valve opening delay time

Control mode **VF** **FOCPG** **FOCPM** Factory setting: 0

Settings 0 – 200ms

- When both the pressure command and flow command activate the machine to start from idle, the flow starts to output. However, due to the slower response of the valve in the hydraulic circuit, the sudden surge of the pressure may occur. The pressure may recover to normal until the valve is fully opened. To avoid the aforementioned effect, set this parameter to increase time for the flow output delay.

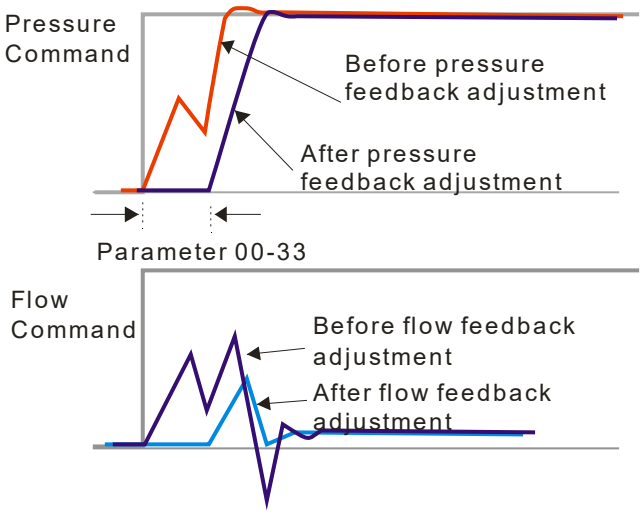

00-34 Output switching function

Control mode **VF** **FOCPG** **FOCPM** Factory setting: 50.0

Settings 0.0 ~ 100.0%

00-35 Over-pressure detection level

Control mode **VF** **FOCPG** **FOCPM** Factory setting: 230

Settings 0~400 Bar

- When the pressure feedback exceeds this parameter setting, an “ovP over pressure” error message may occur.
- Firmware version 2.04 and above, maximum value 400Bar, the previous version’s maximum allowed value is 250Bar.

00-52 Detecting time of pressure-overshoot

Control mode	VF	FOCPG	FOCPM	Factory setting: 0.01
Settings	0.0000~ 1.0000 sec			

- When the pressure feedback is larger than the level set at Pr.00-35 and over the time set at Pr.00-52, an ovP (over-pressure) warning code will display.
- Warning code: When Pr.00-35= 0, disable detection of pressure-overshoot.

00-36 Detection of disconnection of pressure feedback

Control mode	VF	FOCPG	FOCPM	Factory setting: 0
Settings	0: No function 1: Enable (only for the pressure feedback output signal within 1~5V and 4~20mA)			

- When this parameter is set as 1 and if the pressure feedback signal is below 1V or 4mA, an "PFbF pressure feedback fault" error message may occur.

00-38 Pressure/flow control function selection

Control mode	VF	FOCPG	FOCPM	Factory setting: 0
Settings	**Bit 0:** 0: Switch the PI Gain according to the pressure feedback level and use single speed bandwidth 1: Switch the PI Gain according to the multi-function input terminal **Bit 1:** 0: No pressure/flow control switch 1: Switch between the pressure and flow control **Bit 2:** 0: Use the old pressure overshoot suppression 1: Use the new pressure overshoot suppression **Bit3:** 0: Switch the PI Gain and single speed bandwidth according to the pressure feedback level. 1: Switch the PI Gain and speed bandwidth according to the pressure command. **Bit 8**: 0: Switch between the ASR frequency feedbacks **Bit 9**: 0: Switch between the ASR frequency commands (To use this parameter, you need to convert binary number to decimal.)			

- When the Bit 0 of this parameter is set as 1, the PI Gain for the pressure can be switched in conjunction with the multi-function input terminal

Set Bit2 = 0		
Multi-function input terminal = 47	Multi-function input terminal = 48	
OFF	OFF	PI1 (Pr.00-20 and Pr.00-21) and Pr.00-10: Speed Bandwidth
ON	OFF	PI2 (Pr.00-22 and Pr.00-23) and Pr.00-50: Speed Bandwidth 2
OFF	ON	PI3 (Pr.00-24 and Pr.00-25) and Pr.00-51: Speed Bandwidth
Set Bit2 =1		
Multi-function input terminal = 47	Multi-function input terminal = 47	
OFF	OFF	PID1 (Pr.00-20, Pr.00-21 and Pr.00-37) and Pr.00-10: Speed Bandwidth
ON	OFF	PID2 (Pr.0-22, Pr.02-23 and Pr.00-40) and Pr.00-50 Speed Bandwidth 2
OFF	ON	PID3 (Pr.00-24, Pr.00-25 and Pr.00-41) and Pr.00-51: Speed Bandwidth 3

- When the Bit 1 of this parameter is set as 1, the pressure feedback is lower than the pressure stable region (please refer to the description of Pr.00-26) so the flow control will be performed. When it enters the pressure stable region, the pressure control will be applied.

- When Bit1= 0, the Pressure Response is slow and the pressure overshoot is weak.
  When Bit1 = 1, the Pressure Response is fast and the pressure overshoot is strong.
- Set Bit2 = 0, the setting at Pr.00-39 and Pr.00-42 are used to suppress pressure overshoot.
  But when Bit2 = 1, the setting at Pr.00-37 is used to suppress pressure overshoot.
- When Bit3 =1:

Pressure Command	P, I Gain and Speed Bandwidth	**D** (Set Bit2 =1)
Smaller than or equal to the maximum pressure command (Pr.00-07) x 25%	PI1 (Pr.00-20 and Pr.00-21) and Pr.00-10: Speed Bandwidth	Pr.00-37
Equal to the maximum value for pressure command (Pr.00-07)	PI2 (Pr.00-22 and Pr.00-23) and Pr.00-50: Speed Bandwidth 2	
Pressure command between 25% and 100%.	The PI Gain and Speed Bandwidth can be obtained by calculating the linear interpolation.	

00-39 I gain of Pressure overshoot 1

Control mode	VF	FOCPG FOCPM	Factory setting: 0.2
Settings	0.00~500.00 sec.		

00-42 Pressure overshoot level

Control mode	VF	FOCPG FOCPM	Factory setting: 2
Settings	0~100%		

- By using the factory setting 250 bar of the Pr.00-08 Maximum Pressure Feedback, when the pressure is over 5 bar (250*2%=5 bar), another integral time of Pr.00-39 will do overshoot protection.
- When Pr.00-38=1 and Pr.00-39=0, Pr.00-42 is disabled.

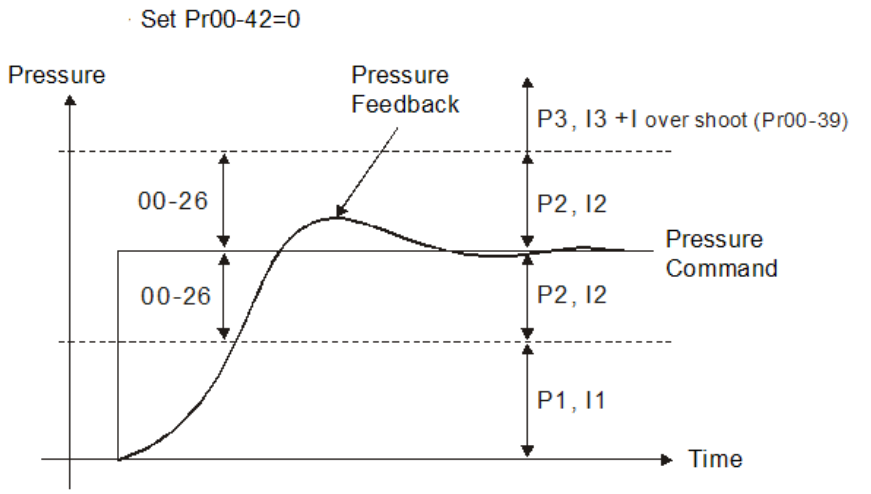

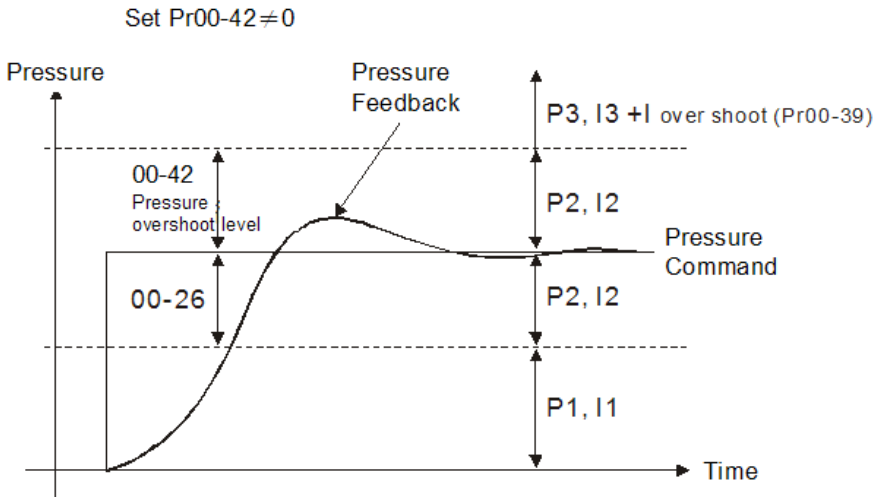

00-43 Maximum Flow

Control mode	VF	FOCPG FOCPM	Factory setting: 100
Settings	0~100%		

- Set up this parameter to adjust the maximum rotation frequency (maximum flow rate). It is not necessary to stop the hybrid servo drive to set up this parameter. When this parameter is set to be 100%, it corresponds to the maximum rotation frequency of Pr.01-02.

00-44 Pressure Command

Control mode **VF** **FOCPG FOCPM** Factory setting: 0

Settings 0~400bar

00-45 Flow Command

Control mode **VF** **FOCPG FOCPM** Factory setting: 0

Settings 0~100%

- When Pr.00-44 ≠ 0, Pressure Command will not be given by the analog signal but input by Pr.00-44.
- When Pr.00-45 ≠ 0, Flow Command will not be given by the analog signal but input by Pr.00-45.
- Pr00-44 & Pr.00-45 can be applied in an environment without input of analog signal to do simple test.

00-46 Pressure reference S1 time

Control mode **VF** **FOCPG FOCPM** Factory setting: 0

Settings 0~1000ms

00-47 Pressure reference S2 time

Control mode **VF** **FOCPG FOCPM** Factory setting: 0

Settings 0~1000ms

- To increase the smoothness at start or stop while increasing or decreasing the percentage of the pressure command. The longer the pressure reference time, the smoother it will be.

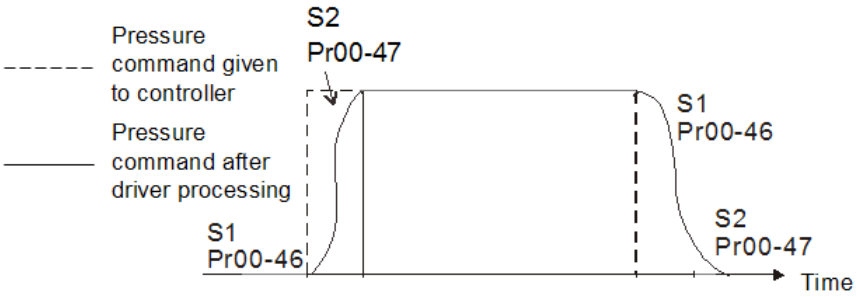

00-48 Flow reference S1 time

Control mode **VF** **FOCPG FOCPM** Factory setting: 0

Settings 0~1000ms

00-49 Flow reference S2 time

Control mode **VF** **FOCPG FOCPM** Factory setting: 0

Settings 0~1000ms

- To increase the smoothness at start or stop while increasing or decreasing the percentage of the flow command. The longer the flow reference time, the smoother it will be.

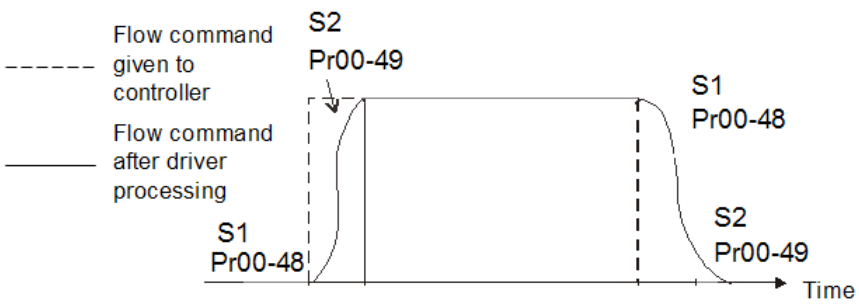

00-53 Oil shortage detecting time

Control mode **VF** **FOCPG FOCPM** Factory setting: 0.0

Settings 0.0 ~60.0 sec

00-60 Oil shortage detecting time at startup

Control mode **VF** **FOCPG FOCPM** Factory setting: 0

Settings 0 ~10min

00-54 Oil pump reverse running detecting time

Control mode **VF** **FOCPG FOCPM** Factory setting: 0.0

Settings 0.0 ~60.0 sec

- When the oil pump runs reversely exceeds the time set at Pr.00-54, a reverse running warning will pop up on the keypad.
- When Pr.00-54 =0.0, this function is disabled.

00-55 ~ 00-58 Reserved

00-59 Minimum Flow

Control mode **VF** **FOCPG FOCPM** Factory setting: 5.00

Settings 0.00 ~ 100.00%

- To set the minimum pressure, the 100% of Pr.00-27 matches the setting at Pr.00-08 and the 100% of Pr.00-55 matches the setting at Pr.01-02.
- It is necessary to maintain a minimum flow to make sure that the oil passage is filled with oil at all times. So that there will not be a delay on oil tank activation when sending a pressure/ flow command.
- When the pressure command is 0, the hybrid servo drive keeps the minimum pressure.
- When the pressure command is lower than the minimum pressure but higher than 0.7bar, the hybrid servo drive follows the pressure command. For example, when the pressure command is 1 bar, the hybrid servo drive keeps the pressure at 1 bar.
- When the pressure command is lower than 0.7bar, the hybrid servo drive keeps the minimum pressure.

00-61 Minimum Pressure 2

Control mode **VF** **FOCPG FOCPM** Factory setting: 0.1

Settings: 0.0 ~ 100.0%

The setting value of Pr.00-08 Maximum Feedback Pressure is the 100% of this parameter Pr.00-61.

00-62 Minimum Flow 2

Control mode **VF** **FOCPG FOCPM** Factory setting: 5.00

Settings 0.00 ~ 100.00%

The setting value at Pr.01-02 Maximum Operating Frequency is the 100% of this parameter Pr.00-62.

00-63 Pressure Releasing Valve Opening Time Interval

Control mode **VF** **FOCPG FOCPM** Factory setting: 0.100

Settings 0.000 ~ 0.100 sec

The output signal MO-46 opens the pressure releasing valve when:

1) Speed command is to run reversely,
2) Pressure command is to decrease the pressure
3) The elapsed time is longer than time set at Pr.00-63.
4) The feedback pressure doesn't reach yet the stable pressure zone.

Use Pr.00-63 to set up the time interval between opening and closing pressure releasing valve to avoid unnecessary valve opening and closing (ON / OFF)

00-64 ~ 00-65 For specific customers only

00-66 Multi-flow rate / speed command 1

Control mode **VF** **FOCPG FOCPM** Factory setting: 0

Settings 0.00 ~ 599.00Hz

00-67 Multi-flow rate / speed command 2

Control mode **VF** **FOCPG FOCPM** Factory setting: 0

Settings 0.00 ~ 599.00Hz

00-68 Multi-flow rate / speed command 3

Control mode **VF** **FOCPG FOCPM** Factory setting: 0

Settings 0.00 ~ 599.00Hz

00-69 Multi-flow rate / speed command 4

Control mode **VF** **FOCPG FOCPM** Factory setting: 0

Settings 0.00 ~ 599.00Hz

00-70 Multi-flow rate / speed command 5

Control mode **VF** **FOCPG FOCPM** Factory setting: 0

Settings 0.00 ~ 599.00Hz

00-71 Multi-flow rate / speed command 6

Control mode **VF** **FOCPG FOCPM** Factory setting: 0

Settings 0.00 ~ 599.00Hz

00-72 Multi-flow rate / speed command 7

Control mode **VF** **FOCPG FOCPM** Factory setting: 0

Settings 0.00 ~ 599.00Hz

- You can set up multi-function input commands (Pr.03-00 to Pr.03-02) to choose different multi-flowrate / speed commands (MI functions #52, #53, #54).
- The multi-flow rate / speed commands 1~7 (Pr.00-66 ~ Pr.00-72) correspond to the MI functions (#52, #53, #54) in binary code.
- When MI functions #52, #53 and #54 are set to 0, the flowrate command becomes the setting value of Pr.00-45.
- Use Pr.00-66 to Pr.00-72 to set up multi-flow rate / speed commands 1~7.

00-73 ~ 00-90 For specific customers only

00-91 Output quantity of oil pump

Control mode **VF** **FOCPG FOCPM** Factory setting: 0

Settings 0 ~ 500cc/rev

- 0: Turn off pressure loss detection
- To detect if there is a pressure loss.

00-92 Pressure loss detectiing time

Control mode **VF** **FOCPG FOCPM** Factory setting: 0

Settings 0 ~ 60.0 sec

- 0: Turn off pressure loss detection
- To detect if there is a pressure loss.
- The larger the value, the less sensitive to detect the pressure loss. The smaller the value, the more sensitive to detect the pressure loss.

00-93 Pressure limit percentage

Control mode **VF** **FOCPG FOCPM** Factory setting: 10

Settings 0 ~ 100%

- Pressure limit = Pressure command x Pressure limit %
- Set MI =44 as ON, when the pressure error is smaller than the pressure limit, the hybrid servo motor switches to pressure more. When the pressure error is larger than the pressure limit, the hybrid servo drive switches to flowrate mode.

00-94 Pressure releasing level

Factory setting: 20

Settings 0 ~ 200%

When the pressure command and pressure feedback error are bigger than the setting at Pr.00-08 (maximum feedback pressure), this MO terminal starts to output.

00-95 Pressure releasing limit

Factory setting: 20

Settings 0 ~ 400bar

When the pressure feedback is lower than the setting at Pr.00-95, this parameter is disabled.

01 Motor Parameters

✓ You can set this parameter during operation.

01-00 Control mode

Control mode **VF** **FOCPG** **FOCPM** Factory setting: 5

Settings
0：V/F
1: Reserved
2: Reserved
3: FOCPGIM (Induction Motor)
4: Reserved
5: FOCPGPM (Synchronous Motor)
6: Reserved
7: Reserved

This parameter determines the control mode of this motor.

0: V/F control, the user can design the required V/F ratio. This control mode needs induction motors.

1: Reserved

2: Reserved

3: FOC vector control + Encoder. This control mode needs induction motors.

4: Reserved

5: FOC vector control + Encoder. This control mode needs synchronous motors.

6: Reserved
7: Reserved

✓ 01-01 Source of operating command

Control mode **VF** **FOCPG** **FOCPM** Factory setting: 0

Settings
0: The operating command is controlled by the digital keypad
1: The operating command is controlled by the external terminals. The STOP button on the keypad is disabled
2: The operating command is controlled by the communication interface. The STOP button on the keypad is disabled
3: The operating command is controlled by CANopen

For the operating command, press the PU button to allow the “PU” indicator to be lit. In this case, the RUN, JOG, and STOP button are enabled.

01-02 Motor’s maximum operating frequency

Control mode **VF** **FOCPG** **FOCPM** Factory setting: 166.67

Settings 50.00 – 599.00Hz

Set the maximum operating frequency range of the motor. This setting is corresponding to the maximum flow for the system.

When the control mode is FOCPGPM (Pr.01-00=5), the user defined speed display (Pr.00-06) follows the setting of number of poles of synchronous motor (Pr.01-20) to adjust the motor maximum operating frequency(Pr.01-02)

Frequency = Motor’s rotating speed (rpm) x Motor’s number of pole / 120

01-03 Motor’s rated frequency

Control mode **VF** **FOCPG** **FOCPM** Factory setting: 113.33

Settings 0.00~599.00Hz

Typically, this setting is configured according to the rated voltage and frequency listed in the specifications on the motor’s nameplate. If the motor is intended for 60Hz, set this value as 60Hz; if the motor is intended for 50Hz, set this value as 50Hz.

🕮 Motor's rated frequency (Pr.01-03) changes as Rated speed of the synchronous motor (Pr.01-19) and Number of poles of the synchronous motor (Pr.02-120) change.

01-04 Motor's rated voltage

Control mode	VF	FOCPG	Factory setting: 220.0/440.0
Settings	230V models: 0.1 – 255.0V		
	460V models: 0.1 – 510.0V		

🕮 Typically, this setting is configured according to the rated operation voltage shown on the motor's nameplate. If the motor is intended for 220V, set this value as 220.0V; if the motor is intended for 200V, set this value as 200.0V.

01-05 Acceleration time setting

Control mode	VF	FOCPG FOCPM	Factory setting: 0.00
Settings	0.00 – 600.00 seconds		

01-06 Deceleration time setting

Control mode	VF	FOCPG FOCPM	Factory setting: 0.00
Settings	0.00 – 600.00 seconds		

🕮 The acceleration time determines the time required for the hybrid servo motor to accelerate from 0.00Hz to [the motor's maximum frequency] (Pr.01-02). The deceleration time determines the time required for the hybrid servo motor to decelerate from [the motor's maximum frequency] (Pr.01-02) to 0.0Hz.

01-07 Motor Parameter Auto Tuning

Factory setting: 0

Settings / Control mode	VF	FOCPG	FOCPM
0: No function	○	○	
1: Dynamic test for induction motor (IM) (Rs, Rr, Lm, Lx, no-load current)	○	○	
2: Static test for induction motor (IM)	○	○	
3: Reserved			
4: Auto measure the angle between magnetic pole and PG origin			○
5: Dynamic test for SPM motor			○
13: Dynamic test for IPM motor			
14: Correction of pressure feedback offset			

🕮 If the parameter is set as 1~2, it will perform the parameter automatic tuning for the Induction motor. In this case, press the [Run] button to perform the automatic measurement operation immediately. After the measurement is complete, the values are filled into Pr.01-13 ~ Pr.01-16 (no-load current, Rs, Rr, Lm, and Lx), respectively.

Induction motor *AUTO-Tuning procedure:* (Rolling test)

1. All parameters of the hybrid servo drive are set to factory settings and the motor is connected correctly.
2. Users are strongly advised to disconnect the motor from any load before tuning. That is to say, the motor contains only the output shaft and connects to neither a belt nor a decelerator. Otherwise, it will be impossible to disconnect the motor from any loads. Static tuning is advised※.

3. Set the rated voltage Pr.01-04, rated frequency Pr.01-03, rated current Pr.01-08, rated power Pr.01-09, rated speed Pr.01-10, and number of poles Pr.01-11 of the motor with correct values, respectively. For the acceleration/deceleration time, please set the correct values.
4. Set Pr.01-07 as 1 and then press the RUN button on the keypad. The auto tuning process for the motor is carried out immediately. (Note: the motor starts running).
5. After the process is finished, check if the motor's parameters (Pr.01-13 ~ Pr.01-16) have been automatically entered with the measurement data.
6. Equivalent circuit of the motor

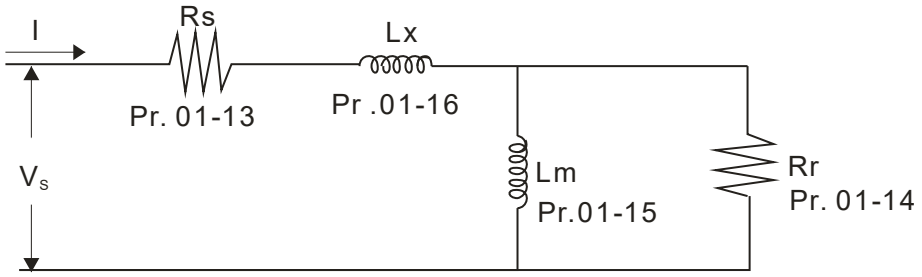

Motor equivalent circuit used by VJ

NOTE

※.When the static tuning (Pr.01-07 = 2) is used, you must enter the no-load current to the motor. It is generally 20 to 50% of the rated current.

If the parameter is set as 5 or 13, it will perform the parameter automatic tuning for the synchronous motor. In this case, press the [Run] button to perform the automatic measurement operation immediately. After the measurement is complete, the values are filled into Pr.01-22 (Rs), Pr.01-23 & 24 (Ld & Lq), Pr.01-25 (Back EMF of the synchronous motor), respectively.

Synchronous motor *AUTO-Tuning procedure:* (static measurement)

1. All parameters of the hybrid servo drive are set to factory settings and the motor is connected correctly.
2. Set the rated current Pr.01-17, rated power Pr.01-18, rated speed Pr.01-19, and number of poles Pr.01-20 of the motor with correct values, respectively. For the acceleration/deceleration time, please set the values according to the motor's capacity.
3. Set Pr.01-07 as 5 and then press the RUN button. The auto tuning process for the motor is carried out immediately. (Note: the motor starts running slightly).
4. After the process is finished, check if the motor's parameters (Pr.01-22 ~ Pr.01-25) have been automatically entered with the measurement data.

If the parameter is set as 4, the automatic measurement of the angle between magnetic pole and the PG origin for the synchronous motor is performed. In this case, press the [Run] button to immediately perform automatic measurement. The measured data will be entered into Pr.01-27.

Angle between magnetic pole and the PG origin Auto-Tuning process for the synchronous motor:

1. After the measurement process for parameter value of 5 is performed completely or manually enter the Pr.01-03, Pr.01-17 to Pr.01-25, respectively.
2. Before tuning, it is recommended to separate the motor and the load.
3. Set Pr.01-07 as 4 and then press the RUN button on the keypad. The auto tuning process for the motor is carried out immediately. (Note: the motor starts running).

4. After the process is complete, please check if the values for the angle between magnetic poles and PG origin have been automatically entered in the Pr.01-27.

01-08 Rated current of the induction motor (A)

Control mode **FOCPG**

Unit: Ampere

Factory setting: #. ##

Settings 40~120% of the rated driving current

To set this parameter, the user can set the rated motor current range shown on the motor's nameplate. The Factory setting is 90% of the rated current of the hybrid servo drive.

For example: For the 7.5HP (5.5kW) motor, the rated current is 25, the factory settings: 22.5A.

The customers can set the parameter within the range 10 ~ 30A.

25*40%=10 25*120%=30

01-09 Rated power of the induction motor

Control mode **FOCPG**

Factory setting: #.##

Settings 0 – 655.35kW

Set the motor's rated power. The Factory setting value is the power of the hybrid servo drive.

01-10 Rated speed of the induction motor

Control mode **FOCPG**

Factory setting:

1710 (60Hz 4-pole)

1410 (50Hz 4-pole)

Settings 0~65535

This parameter sets the rated speed of the motor. It is necessary to refer to the specifications shown on the motor's nameplate.

01-11 Number of poles of the induction motor

Control mode **FOCPG**

Factory setting: 4

Settings 2~20

This parameter sets the number of motor number of poles (odd number is not allowed).

01-12 No-load current of the induction motor (A)

Control mode **FOCPG**

Unit: Ampere

Factory setting: 40

Settings 0~ Default value of Pr.01-08

The Factory setting is 40% of the rated current of the hybrid servo drive.

01-13 Stator resistance (Rs) of the induction motor

Control mode **FOCPG** Factory setting: 0

01-14 Rotor resistance (Rr) of the induction motor

Control mode **FOCPG** Factory setting: 0

Settings 0~65.535Ω

01-15 Magnetizing inductance (Lm) of the induction motor

Control mode **FOCPG** Factory setting: 0

01-16 Total leakage inductance (Lx) of the induction motor

Control mode **FOCPG** Factory setting: 0

Settings 0.0~6553.5mH

01-17 Rated current of the synchronous motor

Control mode **FOCPM** Factory setting: 0.00

Settings 0~655.35 Amps

The user can set the rated current shown on the synchronous motor's nameplate.

01-18 Rated power of the synchronous motor

Control mode **FOCPM** Factory setting: 0.00

Settings 0.00 – 655.35kW

This parameter sets the rated power of the synchronous motor.

01-19 Rated speed of the synchronous motor

Control mode **FOCPM** Factory setting: 1700

Settings 0~65535

This parameter sets the rated speed of the synchronous motor. It is necessary to refer to the specifications shown on the motor's nameplate.

01-20 Number of poles of the synchronous motor

Control mode **FOCPM** Factory setting: 8

Settings 2~20

This parameter sets the number of the synchronous motor's number of poles (odd number is not allowed).

01-21 Inertia of the synchronous motor's rotor

Control mode **FOCPM** Factory setting: 0.0

Settings 0.0~6553.5 $*10^{-4}$ kg.m2

01-22 Stator's phase resistance (Rs) of the synchronous motor

Control mode **FOCPM** Factory setting: 0.000

Settings 0,000~65.535Ω

Enter the phase resistance of the synchronous motor.

01-23 Stator's phase inductance (Ld) of the synchronous motor
01-24 Stator's phase inductance (Lq) of the synchronous motor

Control mode	**FOCPM**	Factory setting: 0.00
Settings	0.0~655.35mH	

Enter the synchronous motor's phase inductance. For surface type magnets (SPM), Ld = Lq; for built-in magnets (IPM), Ld ≠ Lq.

01-25 Back EMF of the synchronous motor

Control mode	**FOCPM**	Factory setting: 0
Settings	0~65535 V/krpm	

Enter the back EMF of the synchronous motor.

01-26 Encoder type selection

Control mode	**FOCPM**	Factory setting: 3
Settings	3: Resolver	

01-27 PG Offset angle of synchronous motor

Control mode	**FOCPM**	Factory setting: 0.0
Settings	0.0～360.0°	

Offset angle of the PG origin for the synchronous motor.

01-28 Number of poles of the resolver

Control mode	**FOCPM**	Factory setting: 1
Settings	1~5	

01-29 Encoder Pulse

Control mode	**FOCPG** **FOCPM**	Factory setting: 1024
Settings	1~20000	

This parameter can be set the encoder's number of pulses per revolution (PPR).

01-30 Encoder's input type setting

Control mode **FOCPG** **FOCPM** Factory setting: 1

Settings 0: No function

1: Phase A leads in a forward run command and phase B leads in a reverse run command.

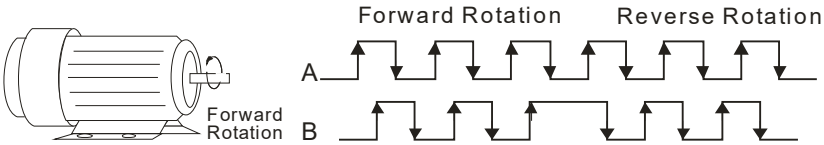

2: Phase B leads in a forward run command and phase A leads in a reverse run command.

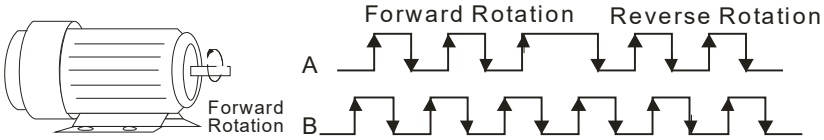

3: Phase A is a pulse input and phase B is a direction input. (low input = reverse direction, high input = forward direction).

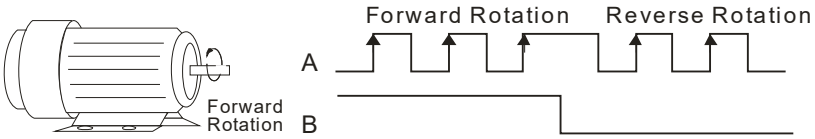

4: Phase A is a pulse input and phase B is a direction input. (low input = forward direction, high input = reverse direction).

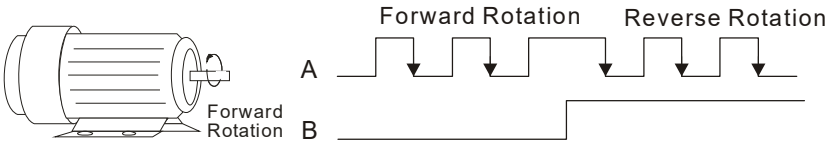

5: Single-phase input

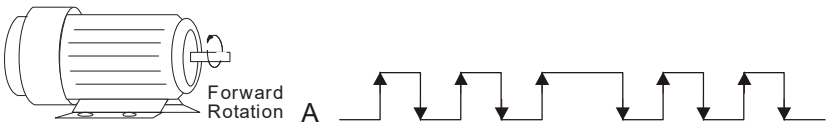

Enter the correct setting for the pulse type is helpful in controlling the stability.

01-31 System control

Control mode **FOCPG** **FOCPM** Factory setting: 1

Settings 0: No function

1: ASR automatic tuning

2: Estimation of inertia

If the setting value is 1: The speed control gain is determined by Pr.00-10.

If the setting value is 2: The system inertia is estimated. Refer to descriptions in Chapter 3.

01-32 Unity value of the system inertia

Control mode **FOCPG** **FOCPM** Factory setting: 260

Settings 1~65535 (256 = 1 per unit)

01-33 Carrier frequency

Control mode **FOCPG** **FOCPM** Factory setting: 5

Settings 4~ 10KHz

- When this parameter is configured, please restart the hybrid servo drive.
- The carrier frequency of the PWM output has a significant influence on the electromagnetic noise of the motor. The heat dissipation of the hybrid servo drive and the interference from the environment may also affect the noise. Therefore, if the ambient noise is greater than the motor noise, reducing the carrier frequency of the drive may have the benefits of reducing a temperature rise; if the carrier frequency is high, even if a quiet operation is obtained, the overall wiring and interference control should be taken into consideration.
- When the carrier frequency increases, the rated current decreases as shown in the table below. So, the overload capacity also decreases.

Carrier Frequency (kHz)	Rated Current (Pr.00-01)
4	100%
5	100%
6	90%
7	82%
8	75%
9	68%
10	62%

01-34 Reserved

01-35 Motor ID

Control mode **FOCPG FOCPM** Factory setting: 0

Settings

	Delta's Hybrid Servo Motor	
0	Disabled	
16	ECMA-ER181BP3	11kW220V motor
17	ECMA-KR181BP3	11kW380V motor
18	ECMA-ER221FPS	15kW220V motor
19	ECMA-KR221FPS	15kW380V motor
20	ECMA-ER222APS	20kW220V motor
21	ECMA-KR222APS	20kW380V motor
125	MSJ-KR133AE48B	30kW380V motor
215	MSJ-IR2070E42C	7kW380V motor
216	MSJ-DR201AE42C	10.4kW220V motor
217	MSJ-IR201AE42C	10.3kW380V motor
218	MSJ-DR201EE42C	14.6kW220V motor
219	MSJ-IR201EE42C	14.2kW380V motor
220	MSJ-DR201IE42C	18.4kW220V motor
221	MSJ-IR201IE42C	18.3kW380V motor
222	MSJ-GR202DE42C	23.1kW220V motor
223	MSJ-OR202DE42C	23kW380V motor
224	MSJ-DR202HE42C	27.6kW220V motor
225	MSJ-LR202FE42C	25kW380V motor
227	MSJ-IR203CE42C	32kW380V motor
229	MSJ-OR264FE48C	45.2kW380V motor
231	MSJ-IR265CE48C	52.5kW380V motor
233	MSJ-IR266IE428	68kW380V motor
245	MSJ-IR202HE42C	27kW380V motor
617	MSJ-IR201BE42E	11kW380V motor
619	MSJ-IR201FE42E	15kW380V motor
621	MSJ-IR201IE42E	18.5kW380V motor
623	MSJ-IR202CE42E	22kW380V motor
625	MSJ-IR203AE42E	30kW380V motor
627	MSJ-LR263HE48E	37kW380V motor
629	MSJ-LR264FE48E	45kW380V motor
633	MSJ-LR266AE48E	60kW380V motor
645	MSJ-IR202GE42E	26kW380V motor

01-36 Change the rotation direction

Control mode **FOCPG FOCPM** Factory setting: 0

Settings
0: When the drive runs forward, the motor rotates counterclockwise. When the drive runs reverse, the motor rotates clockwise.
1: When the drive runs forward, the motor rotates clockwise. When the drive runs reverse, the motor rotates counterclockwise.

This parameter can be modified only when the whole system is at stop.

01-37 HES ID#

Control mode **FOCPG FOCPM** Factory setting: 0

Settings 0: No function

Model	ID#
HES063H23C	2122
HES080H23C	3122
HES100H23C	4122
HES125H23C	5122
HES160H23C	6122
HES200H23C	7122
HES250G23C	8022
HES063H23A	2120
HES080G23A	3020
HES080H23A	3120
HES100G23A	4020
HES100H23A	4120
HES100Z23A	4220
HES125G23A	5020
HES125H23A	5120
HES160G23A	6020
HES160H23A	6120
HES200G23A	7020

Model	ID#
HES063G43A	2040
HES063H43A	2140
HES080G43A	3040
HES080H43A	3140
HES100G43A	4040
HES100H43A	4140
HES100Z43A	4240
HES125G43A	5040
HES125H43A	5140
HES160G43A	6040
HES160H43A	6140
HES200G43A	7040
HES125H43F/HES100M43F	5143
HES160H43F/HES125M43F	6143
HES160M43F	6343
HES200H43F	7143
HES250M43F	8343
HES400M43F	10343
HES250Z43F	8243

Model	ID#
HES063H43C	2142
HES080H43C	3142
HES100H43C	4142
HES125H43C	5142
HES160H43C	6142
HES063M43C	2342
HES080M43C	3342
HES100M43C	4342
HES125M43C	5342
HES160M43C	6342
HES200M43C	7342
HES200H43C	7142
HES250M43C	8342
HES320M43C	9342
HES063Z43F	2243
HES080Z43F	3243
HES100Z43F	4243
HES125Z43F	5243
HES160Z43F	6243

01-38 Maximum Output Voltage

Control mode **FOCPG FOCPM** Factory Setting: 100%

Settings 0 ~110%

The maximum output voltage is (V_{DC} * Pr.01-38)/√2. Once the motor is in the weak magnetic field, user can increase the output voltage to decrease motor's current by using DC bus voltage. However, if the output voltage is too high, there will be a current distortion, which will affect the stability of motor torque force.

01-39 PDFF (Speed overshoot suppression parameter)

Control mode **FOCPG FOCPM** Factory Setting: 100

Settings 0 ~200

02 Protection Parameters

✓ You can set this parameter during operation.

✓ 02-00 Software brake level

Control mode	VF	FOCPG	FOCPM	Factory setting: 380.0/760.0
Settings	230V models: 350.0~450.0V_{DC}			
	460V models: 700.0~900.0V_{DC}			

📖 Sets the reference point of software brake. The reference value is the DC bus voltage.

02-01 Fault record 1
02-02 Fault record 2
02-03 Fault record 3
02-04 Fault record 4
02-05 Fault record 5
02-06 Fault record 6

Settings / Control mode	VF	FOCPG	FOCPM
0: No error record	○	○	○
1: Over-current during acceleration (ocA)	○	○	○
2: Over-current during deceleration (ocd)	○	○	○
3: Over-current during constant speed (ocn)	○	○	○
4: Ground fault (GFF)	○	○	○
5: IGBT short-circuit (occ)	○	○	○
6: Over-current at stop (ocS)	○	○	○
7: Over-voltage during acceleration (ovA)	○	○	○
8: Over-voltage during deceleration (ovd)	○	○	○
9: Over-voltage during constant speed (ovn)	○	○	○
10: Over-voltage at stop (ovS)	○	○	○
11: Low-voltage during acceleration (LvA)	○	○	○
12: Low-voltage during deceleration (Lvd)	○	○	○
13: Low-voltage during constant speed (Lvn)	○	○	○
14: Low-voltage at stop (LvS)	○	○	○
15: Phase loss protection (PHL)	○	○	○
16: IGBT over-heat (oH1)	○	○	○
17: Heat sink over-heat for 40HP and above (oH2)	○	○	○
18: TH1 open: IGBT over-heat protection circuit error (tH1o)	○	○	○
19: TH2 open: heat sink over-heat protection circuit error (tH2o)	○	○	○
20: IGBT over heated and unusual fan function (oHF)	○	○	○
21: Hybrid servo drive overload (oL)	○	○	○
22: Motor 1 overload (EoL1)	○	○	○
23: Reserved			
24: Motor over-heat, detect by PTC (oH3)	○	○	○
25: Reserved			

26: Reserved	○	○	○
27: Reserved	○	○	○
28: Reserved			
29: Reserved			
30: Memory write error (cF1)	○	○	○
31: Memory read error (cF2)	○	○	○
32: Isum current detection error (cd0)	○	○	○
33: U-phase current detection error (cd1)	○	○	○
34: V-phase current detection error (cd2)	○	○	○
35: W-phase current detection error (cd3)	○	○	○
36: Over current detection error (Hd0)	○	○	○
37: Over current detection error (Hd1)	○	○	○
38: Over voltage detection error (Hd2)	○	○	○
39: Ground current detection error (Hd3)	○	○	○
40: Auto tuning error (AuE)			○
41: Reserved	○	○	○
42: PG feedback error (PGF1)		○	○
43: PG feedback loss (PGF2)		○	○
44: PG feedback stall (PGF3)		○	○
45: PG feedback slip (PGF4)		○	○
46: Reserved	○	○	○
47: Reserved	○	○	○
48: Reserved			
49: External fault input (EF)	○	○	○
50: Emergency stop (EF1)	○	○	○
51: Reserved			
52: Password error (Pcod)	○	○	○
53: CPU error (ccod)			
54: Communication error (cE1)	○	○	○
55: Communication error (cE2)	○	○	○
56: Communication error (cE3)	○	○	○
57: Communication error (cE4)	○	○	○
58: RS-485 Modbus Communication time out (cE10)	○	○	○
59: Reserved	○	○	○
60: Braking transistor error (bF)	○	○	○
61~64: Reserved	○	○	○
65: PG card information error or magnetic pole angle tuning error (PGF5)			○
66: Over pressure (ovP)	○	○	○
67: Pressure feedback fault (PFbF)	○	○	○
68: Oil pump runs reversely (Prev)			
69: Oil shortage (noil)			

70: Reserved

71: Over current at braking chopper overflowed (ocbS)

72: Braking resistor is open-circuit (bro)

73: Resistance of braking resistor is too small (brF)

74: Braking chopper overheated (oH4)

75: Error occurred on Brake chopper's thermal protection line (tH4o)

76~81: Reserved

82: Output Phase Loss on Phase U (oPL1)

83: Output Phase Loss on Phase V (oPL2)

84: Output Phase Loss on Phase W (oPL3)

85, 86, 88~100: Reserved

87: Hybrid motor drive overloading while running at low frequency (oL3)

90: Slave (pump) error, alarm on the master (pump) (SLE)

101: Software error 1 occurred on CANopen (CGdE)

102: Software error 2 occurred on CANopen (CHbE)

103: Reserved

104: Hardware error occurred on CANopen (CbFE)

105: Index setting error occurred on CANopen (CIdE)

106: Slave # setting error occurred on CANopen (CAdE)

107: CANopen's Index is out of range (CFrE)

When a fault occurs and the hybrid servo drive is forced to stop. The fault will be recorded. When the hybrid servo drive stops, the LvS (low voltage when stop) is not recorded.

02-07 Low voltage level

Control mode **VF** **FOCPG** **FOCPM** Factory setting: 180/360

Settings 230V Models: 160 ~ 220V

460V Models: 320 ~ 440V

This parameter is to set the LV discrimination level.

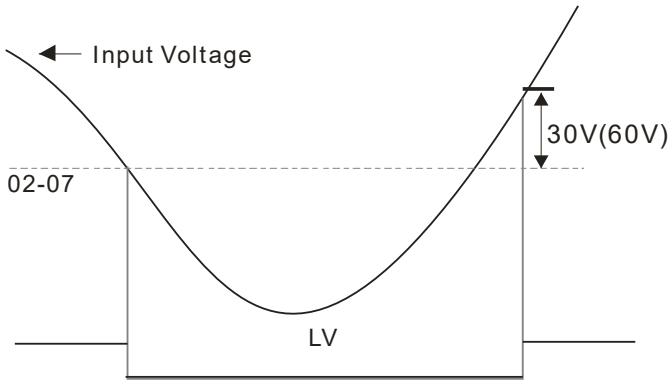

02-08 PTC action selection

Control mode **VF** **FOCPG** **FOCPM** Factory setting: 1

Settings
0: Warn and keep operation
1: Warn and ramp to stop
2: Warn and coast to stop

Set Pr.02-08 to define the operation mode of the drive after the PTC is activated.

02-09 PTC level

Control mode **VF** **FOCPG** **FOCPM** Factory setting:
VJ-A: 120.0; VJ-C: 140.0

Settings
0.0~150.0°C

This parameter only works on KTY84-130.

02-10 Reserved

02-11 PTC type

Control mode **VF** **FOCPG** **FOCPM** Factory setting: 0

Settings
0: Not assigned
1: KTY84-130
2: PTC130
3: Switch (N.C. type)

02-12 Motor fan activation level

Control mode **VF** **FOCPG** **FOCPM** Factory setting: 50.0

Settings
0.0~100.0%
0.0~150.0°C

When Pr.03-05 to Pr.03-07 for the multi-function output terminal are set to 45, the motor fan will start or stop according to this parameter setting.

02-13 Electronic thermal relay 1 selection

Control mode **VF** **FOCPG** **FOCPM** Factory setting: 2

Settings
0: Inverter motor (independent cooling, the cooling fan and the shaft are not synchronized)
1: Standard motor (co-axial cooling, the cooling fan and the shaft are synchronized)
2: Disable

02-14 Electronic thermal relay 1 activation time

Control mode **VF** **FOCPG** **FOCPM** Factory setting: 60.0

Settings
30.0 ~ 600.0 seconds

To prevent self-cooled motor from overheating at low speed operation, the user can set the electronic thermal relay to limit the allowed output power of the hybrid servo drive.

02-15 Output frequency at malfunction

Control mode **VF** **FOCPG FOCPM** Factory setting: Read only

Settings 0.00 – 599.00Hz

02-16 Output voltage at malfunction

Control mode **VF** **FOCPG FOCPM** Factory setting: Read only

Settings 0.0 – 6553.5V

02-17 Output of DC side voltage at malfunction

Control mode **VF** **FOCPG FOCPM** Factory setting: Read only

Settings 0.0 – 6553.5V

02-18 Output current at malfunction

Control mode **VF** **FOCPG FOCPM** Factory setting: Read only

Settings 0.00~655.35Amp

02-19 IGBT temperature at malfunction

Control mode **VF** **FOCPG FOCPM** Factory setting: Read only

Settings -3276.7~3276.7℃

02-20 Auto-reset LvX error

Control mode **VF** **FOCPG FOCPM** Factory setting: 0

Settings 0: Disable, 1: Enable

When this parameter is enabled and when there is RUN signal, the hybrid servo drive will automatically restart after repowering on.

00-23 ~ 00-31 Reserved

02-32 Frequency command at malfunction

Control mode **VF** **FOCPG FOCPM** Factory setting: Read only

Settings 0.00 – 599.00Hz

02-33 Capacitors' temperature at malfunction

Control mode **VF** **FOCPG FOCPM** Factory setting: Read only

Settings -3276.7~3276.7℃

02-34 Motor's rotating speed at malfunction

Control mode	**VF**	**FOCPG FOCPM**	Factory setting: Read only
Settings	-32767~32767rpm		

02-35 Torque command at malfunction

Control mode	**VF**	**FOCPG FOCPM**	Factory setting: Read only
Settings	-32767~32767%		

02-36 Input terminals status at malfunction

Control mode	**VF**	**FOCPG FOCPM**	Factory setting: Read only
Settings	0~65535		

02-37 Output terminals status at malfunction

Control mode	**VF**	**FOCPG FOCPM**	Factory setting: Read only
Settings	0~65535		

02-38 Hybrid servo drive status at malfunction

Control mode	**VF**	**FOCPG FOCPM**	Factory setting: Read only
Settings	0~65535		

02-39 Detecting Braking Resistor at startup

Control mode	**VF**	**FOCPG FOCPM**	Factory setting: 1
Settings	0: Disable 1; Enable		

02-40 Braking resistance

Control mode	**VF**	**FOCPG FOCPM**	Factory setting: 0.0
Settings	0.0 ~ 6553.5Ω		

- Set Pr.02-39 =1 (Enable detection of braking resistor at startup), then as soon as the hybrid servo drive is powered on, a checkup will be performed to know if the braking resistance is appropriate and if the braking resistor is working properly.
- If the braking resistance is too small, the braking resistor could be on an open circuit or is not properly installed. The error code <bro> will be displayed on the keypad.
- If the braking resistance is smaller than the allowable minimum resistance or is on a short circuit, the error code < brF > or < ocbS> will be displayed on the keypad.
- Pr.02-40 is the detected braking resistance.

02-21 Decode the parameter protection with the password

Control mode Factory setting: 0

Settings	0~9999
Display	0~3 times of entering wrong password

- Enter the password set at Pr.02-22 into Pr.02-21, and then the parameters will be unlocked for modifications.
- Write down the setting vale after you set up this parameter to avoid inconveniences.
- Use Pr.02-21 and Pr.02-22 to prevent any unauthorized personnel to modify/ delete parameters.
- If you forget the password, input 9999 and press ENTER, then repeat inputting 9999 and pressing ENTER to complete the decoding procedure (This procedure has to be done in 10 seconds, if you don't finish that in 10 seconds, repeat the same procedure until you finish the procedure in 10 sec.). Once you finish this decoding process, all the parameters will be back to the factory settings.
- When setting up a password, all the parameters will be read as 0, except Pr.02-22

02-22 Set up a parameter protection password

Control mode Factory setting: 0

Settings	0~ 9999
Display	0: No password set or password entered successfully in Pr.02-21.
	1: Parameters are locked

- This parameter is for setting up a password to protect parameters. When you finish setting up a password, keypad will display 1, which means the password protection is now effective.
- Once you input the correct password into Pr.02-21, the hybrid servo drive is temporarily unlocked. To cancel the parameter protection, set Pr.02-22 =0. Once the parameter protection is cancelled, the hybrid servo drive is without password protection even after reboot.
- Decode temporarily or cancel the password then you will be able to use keypad to copy parameters. But the password set at Pr.02-22 will not be copied. When the parameters saved in the keypad are transferred to the hybrid servo drive, you will need to set up a password at Pr.02-22 to enable parameter protection.

Set up a password

Pr02-22

When you finish setting up a password, keypad will display 1 which means the password protection is now enabled.

Forget your password?

Pr02-21

Input 9999 and press ENTER, then repeat inputting 9999 and pressing ENTER to complete the decoding procedure. (This procedure has to be done in10 sec..
If you don't finish that in 10 sec.,repeat the same procedure until you finish the procedure in10 sec

Once you finish this decoding process, all the parameters will be back to the factory settings.

Wrong password?

Pr02-21

You only have 3 password trials to enter the correct password.

If the 1st attempt is incorrect, the keypad will display 01.

if the 2nd attempt is incorrect, the keypad will display 02.

If the 3rd attempt is incorrect, the keypad will display03.

If the 4th attempt is still wrong the keypad will display blinking error code <P code>.

After 3 failed logon attempts, the keypad will be locked.

Power off the motor drive and then re-power on to enter the password.

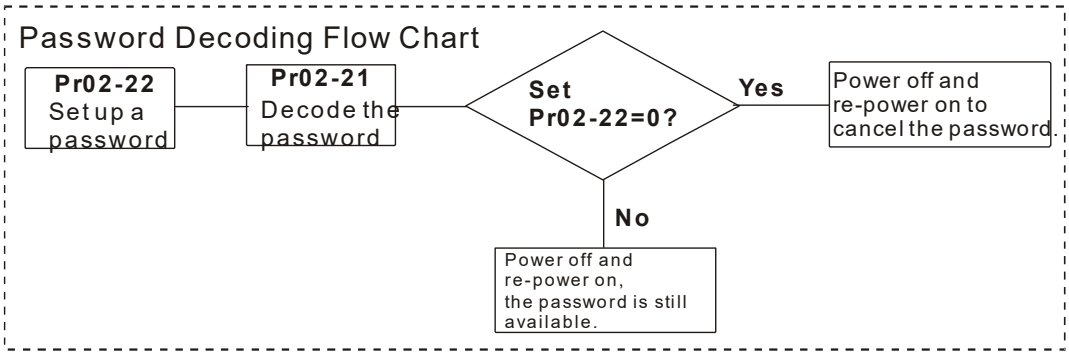

02-41 Limit of current

Control mode **FOCPG FOCP**M Factory setting: 200

Settings 0 ~ 250%

02-42 Maintenance period of the soft-start relay

Factory setting: 0

Settings 0~65535(x10)

0: Turn off the reminder of the remaining lifespan of the soft-start relay.

02-43 Maintenance period of the cooling fan

Factory setting: 0

Settings 0~65535 hour

0: Turn off the reminder of the remaining maintenance hour of the cooling fan.

02-47 Feedback slip detection time

Factory setting: 0.5 sec

Settings 0.01~10.0 sec

Set up a feedback slip detection time to reduce PGF4 faults (slip error) during special applications.

03 Digital/Analog Input/ Output Parameters

✓ You can set this parameter during operation.

03-00 Multi-function input command 3 (MI3)
03-01 Multi-function input command 4 (MI4)
03-02 Multi-function input command 5 (MI5)

Control mode **VF** **FOCPG** **FOCPM** Factory setting: 0

Settings
0: No function
44: Injection signal input
45: Confluence/Diversion signal input
46: Reserved
47: Multi-level pressure PI command 1
48: Multi-level pressure PI command 2
51: Flow rate mode
52: Multi-flow rate / speed command 1
53: Multi-flow rate / speed command 2
54: Multi-flow rate / speed command 3

- When the value of this parameter is set as 44, if the pressure feedback slip is bigger than the pressure limit percentage (Pr.00-93) so the flow rate control will be performed. If the pressure feedback slip is smaller than the pressure limit percentage, the pressure control will be performed.
- If the setting value is 45, the confluence (OFF)/diversion (ON) function will be performed. Refer to Chapter 2 for wiring and Chapter 3 for tuning.
- New protection mechanism at version C: When Pr.03-00 ~ Pr.03-02 = 45, Pr.01-01 is automatically set as 2 and Pr.03-15 is automatically, set as 1. This is a mechanism to prevent forgetting to set up related parameters and mistakes when setting up parameters.
- Refer to the description Pr.00-36 if the setting value is 47 and 48,
- When the setting value is 51 and when the pressure control mode is enabled (Pr.00-09=1), the speed command is the flow command. The PI calculation is no longer required.
- Use multi-input terminals (Pr.03-00 to Pr.03-02) to choose between multi-flow/multi-speed functions (MI functions 52, 53, 54). Multi-flow/multi-speed functions 1~7 correspond to MI functions 52, 53, 54. (in binary number 1~7). When MI 52, 53, 54 are set to 0, the flow rate command is the setting at Pr.00-45. Use Pr.00-66 to Pr.00-72 to set up multi-flow/multi-speed functions 1~7.

✓ 03-03 Digital input response time

Control mode **VF** **FOCPG** **FOCPM** Factory setting: 0.005

Settings 0.001~30.000 sec

- This parameter is to delay and confirm the signal on the digital input terminal.

✓ 03-04 Digital input operation direction

Control mode **VF** **FOCPG** **FOCPM** Factory setting: 0

Settings 0~65535

- This parameter defines the activation level of the input signal.
- Bit 0 for the SON terminal, bit 2 for the EMG terminal, bit 3 for the RES terminal, bits 4~6 correspond to MI3~MI5, respectively.

✓ 03-05 Multi-function output 1 (Relay 1)

Control mode **VF** **FOCPG** **FOCPM** Factory setting: 11

✓ 03-06 Multi-function Output 2 (MOI)

Control mode **VF** **FOCPG** **FOCPM** Factory setting: 0

03-07 Multi-function Output 3 (MO2)

Control mode **VF** **FOCPG** **FOCPM** Factory setting: 0

Settings 0: No function

1: Operation indication

9: hybrid servo drive is ready

11: Error indication

45: Motor fan control signal

46: Pressure release valve control signal

03-08 Multi-function output direction

Control mode **VF** **FOCPG** **FOCPM** Factory setting: 0

Settings 0~65535

This parameter is for bit-wise setting. If the corresponding bit is 1, the multi-function output is set as reverse direction.

03-09 Display low-pass filtering time on the keypad

Control mode **VF** **FOCPG** **FOCPM** Factory setting: 0.100

Settings 0.001~65.535 seconds

This parameter helps to reduce the fluctuation of the readings on the keypad.

03-10 Maximum output voltage for pressure feedback

Control mode **VF** **FOCPG** **FOCPM** Factory setting: 10.00

Settings 5.00~10.00 V

03-11 Minimum output voltage for pressure feedback

Control mode **VF** **FOCPG** **FOCPM** Factory setting: 0.0

Settings 0.00~2.00V

This parameter defines the pressure feedback output voltage.

If the pressure feedback has a bias, adjust this parameter to eliminate the bias.

03-12 Current/Voltage mode pressure sensor selection

Control mode **VF** **FOCPG** **FOCPM** Factory setting: 1

Settings 0: Current mode (4mA~20mA)

1: Voltage mode

PS (Pressure Feedback) terminal: Add a current-fed pressure feedback (4~20mA)

The following are required when using it:

Switch the PS on the I/O board to “I” (factory setting is PS-V).

Set Pr.03-12 = 0 (4~20mA)

Set Pr.00-36 =1 (Enable detection of the pressure feedback loss)

03-13 Confluence Master/Slave Selection

Control mode **VF** **FOCPG** **FOCPM** Factory setting: 0

Settings	0: No function
v	1: Master 1
	2: Slave/Master 2
	3: Slave/Master 3

- In a stand-alone system, this parameter is set as 0
- In a confluence system, the parameter is set as 1 for the Master and 2 for the Slave
- With multi-function input terminal function 45, the confluence/diversion can be configured. For detailed operation, please refer to Chapter 2 for wiring and Chapter 3 for tuning.
- The difference between Master 2 and Master 3 is that the Master 3 can be configured as confluent with other Slaves during confluence; however, the Master 2 can be configured for stand-alone operation.

03-14 The ration between slave's flow and master's flow

Control mode **VF** **FOCPG** **FOCPM** Factory setting: 100.0

Settings	0.0~6553.5 %

- This parameter setting is required only for the Master but not needed for the Slave.
- In a confluence system, this parameter value defines the Slave's portion of the Master's flow.

Example: Slave is 60L/min and Master is 40L/min, so the setting is 60/40 * 100% = 150%

For confluence of more than 2 pump, the values for the slaves must be the same. For example, if the total flow for a three-pump system is 200L/min, where the Master is 40L/min, then the two Slaves should be 80L/min. The setting of Pr.03-14 should be 160/40 = 400%

03-15 Source of frequency command

Control mode **VF** **FOCPG** **FOCPM** Factory setting: 0

Settings	0: Digital Keypad
	1: RS485 Communication
	2~5: Reserved
	6: CANopen

- In a confluence system, if the Slave's frequency command is given through the RS485 communication, the setting value should be 1.

03-16 Limit for the Slave reverse depressurization torque

Control mode **VF** **FOCPG** **FOCPM** Factory setting: 0

Settings	0~500%

- Set the torque limit for the Slave's reverse operation.

03-17 Slave's activation level

Control mode **VF** **FOCPG** **FOCPM** Factory setting: 50

Settings	0~100%

- This parameter setting is required only for the Master but not needed for the Slave.
- This parameter determines the activation level for the Slave. A 100% value corresponds to the full flow of the Master.

03-18 Reserved

03-19 Reserved

03-20 Start-up display selection

Control mode **VF** **FOCPG** **FOCPM** Factory setting: 0

Settings
0: F (frequency command)
1: H (actual frequency)
2: Multi-function display (user-defined Pr.00-04)
3: A (Output current)

This parameter is to set up the contents of the start-up screen. The content of the user-defined option is displayed in accordance with the setting value of Pr.00-04.

03-21 Slave reverse running for depressurization

Control mode **VF** **FOCPG** **FOCPM** Factory setting: 0

Settings
0: Disable
1: Enable
2: Reserved

This parameter setting is required only for the Slave but not needed for the Master.

When the parameter is set as 1, make sure that the outlet end of the Slave is not installed with any one-way valve and the Pr.03-16 is set as 500. The maximum reverse running speed is determined by Pr.00-28 Depressurization speed

03-22 Slave closing level

Factory setting: 400

Settings 0~ 400 Bar

Set up this parameter from a Master. The slave pump(s) will be shut down when the master pump detects the pressure higher than the setting value at this parameter. The slave pump(s) will resume to run after the hybrid servo drive goes into stand by.

03-23 Reserved
03-24 Reserved
03-25 Reserved

03-26 AFM1 Multi-function output 1

Factory setting: 20

Settings 0~25

Functions

Setting	Functions	Descriptions
0	Output frequency (Hz)	100% of the output frequency is the setting at Pr.01-00.
1	Frequency command (Hz)	100% of the frequency command is the setting at Pr.01-00.
2	Motor rotation speed	100% of the motor rotation speed is the setting at Pr.01-00
3	Output current	100% of the output current is 2.5 times the rated current of the hybrid servo drive.
4	Output voltage	100% of the output voltage is 2 times the rated voltage of the motor.
5	DC bus voltage	450V (900V) =100%
6	Power factor	-1.000~1.000=100%
7	Power	100% of the power is 2 times the rated power of the hybrid servo drive.
8	Output torque	Full load torque = 100%
9	AVI	(0~10V=0~100%)
10	ACI	(4~20mA=0~100%)
11	AUI	(-10~10V=0~100%)
12~17	Reserved	Reserved
18	IGBT temperature	Rated torque of the motor = 100%
19	Maximum frequency	100% of the maximum frequency is the setting at Pr.01-00.
20	Pressure feedback	

03-27 AFM1 Analogue output gain

Factory setting: 100

Settings 0~500.0%

This function is to adjust the analogue signal (Pr.03-20) sent from the AFM output terminal to the voltage level of an analogue multimeter)

03-30 AFM2 Analogue output gain

Factory setting: 100

Settings 0~500.0%

This function is to adjust the analogue signal (Pr.03-20) sent from the AFM output terminal to the voltage level of an analogue multimeter)

03-29 AFM2 Multi-output function 2

Factory setting: 0

Settings Same setting as Pr.03-26.

03-28 Enable AFM1 analogue reverse output

Factory setting: 0

03-31 Enable AFM2 analogue reverse output

Factory setting: 2

Settings 0: Output absolute voltage.
1: Reverse output 0V; Forward output 0~10V.
2: Reverse output: 0~5 V; Forward output 5~10 V.

04 Communication Parameters

You can set this parameter during operation.

.

The communication port is defined as shown in the figure on the right. We recommend using Delta IFD6500 or IFD6530 as your communication converter between the hybrid servo drive and your computer. See wiring diagram in Ch02 to know the position of this communication port.

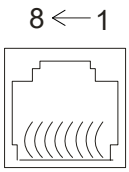

Modbus RS-485:
Pin 1: CAN_H
Pin 2: CAN_L
Pin 3, 6: GND
Pin 4: SG-
Pin 5: SG+
Pin 7: Reserved
Pin 8: +15V

04-00 COM1 Communication Address

Factory Setting: 1

Settings 1~254

If the hybrid servo drive is controlled by RS-485 serial communication, the communication address for this drive must be set via this parameter and each hybrid servo drive's communication address must be different.

04-01 COM1 Transmission Speed

Factory Setting: 19.2

Settings 4.8~115.2 Kbps

This parameter is for setting up the transmission speed of computer and the hybrid servo drive.

Please set 4.8 Kbps, 9.6 Kbps, 19.2 Kbps, 38.4 Kbps, 57.6 Kbps, or 115.2 Kbps. Otherwise the transmission speed will be replaced by 19.2 Kbps.

04-02 COM1 Transmission Fault Treatment

Factory Setting: 3

Settings 0: Warn and keep operation
1: Warn and ramp to stop
2: Warn and coast to stop
3: No warning and continue operation

This parameter is to set the response to the transmission errors such as a disconnection.

04-03 COM1 Time-out Detection

Factory Setting: 0.0

Settings 0.0~100.0 sec.

Use this parameter to set the communication transmission time-out.

04-04 COM1 Communication Protocol

Factory Setting: 13

Settings
0) 7, N, 1 for ASCII
1) 7, N, 2 for ASCII
2) 7, E, 1 for ASCII
3) 7, O, 1 for ASCII
4) 7, E, 2 for ASCII
5) 7, O, 2 for ASCII
6) 8, N, 1 for ASCII
7) 8, N, 2 for ASCII
8) 8, E, 1 for ASCII
9) 8, O, 1 for ASCII
10) 8, E · 2 for ASCII
11) 8, O, 2 for ASCII)
12) 8, N, 1 for RTU)
13) 8, N, 2 for RTU
14) 8, E, 1 for RTU
15) 8, O, 1 for RTU
16) 8, E, 2 for RTU
17) 8, O, 2 for RTU

Control by PC (Computer Link)

When using RS-485 serial communication interface, each drive must be pre-specified its communication address in Pr.09-00, the computer can implement control according to their individual address.

Modbus ASCII (American Standard Code for Information Interchange): Each byte data is the combination of two ASCII characters. For example, a 1-byte data: 64 Hex, shown as ‘64’ in ASCII, consists of ‘6’ (36Hex) and ‘4’ (34Hex).

1. Code Description

Communication protocol is in hexadecimal, ASCII: “0” … “9”, “A” … “F”, every 16 hexadecimal represent ASCII code. For example:

Character	‘0’	‘1’	‘2’	‘3’	‘4’	‘5’	‘6’	‘7’
ASCII code	30H	31H	32H	33H	34H	35H	36H	37H

Character	‘8’	‘9’	‘A’	‘B’	‘C’	‘D’	‘E’	‘F’
ASCII code	38H	39H	41H	42H	43H	44H	45H	46H

2. Data Format

10-bit character frame (For ASCII):

(7, N, 2)

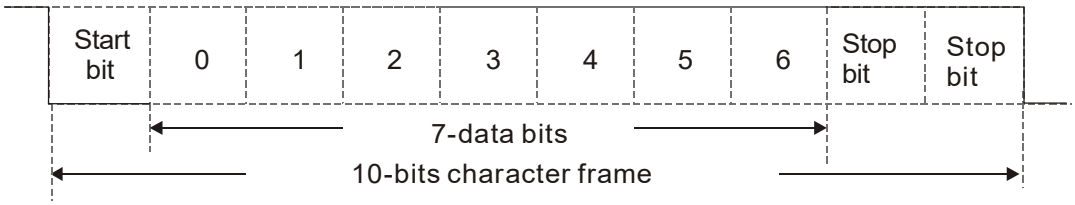

(7, E, 1)

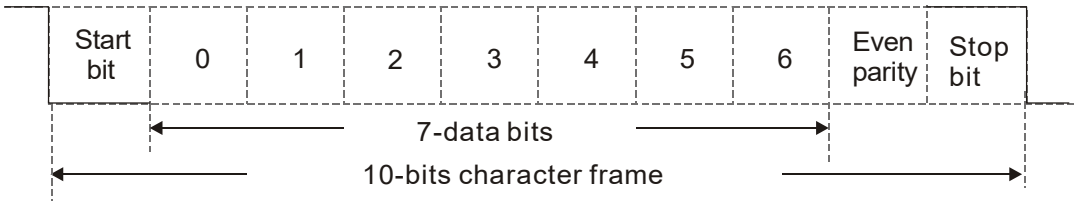

(7, O, 1)

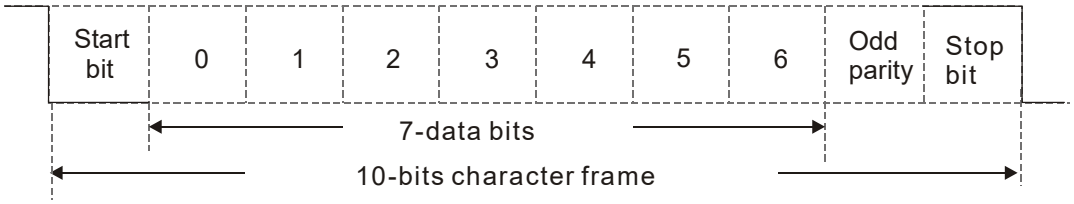

11-bit character frame (For RTU):

(8, N, 2)

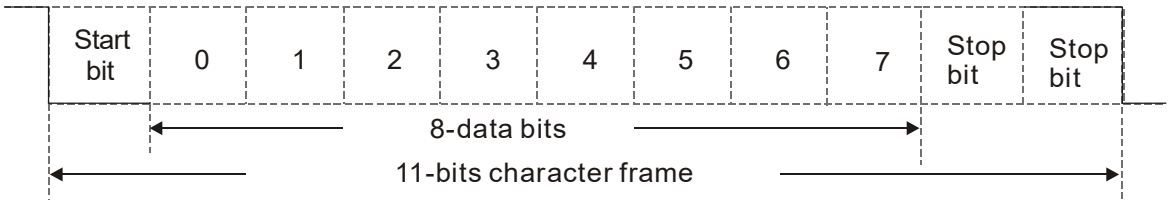

(8, E, 1)

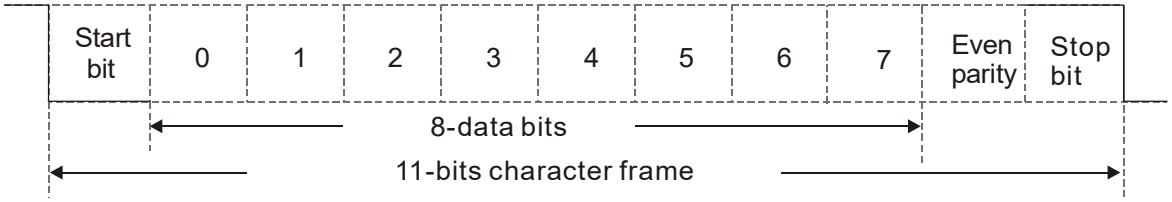

(8, O, 1)

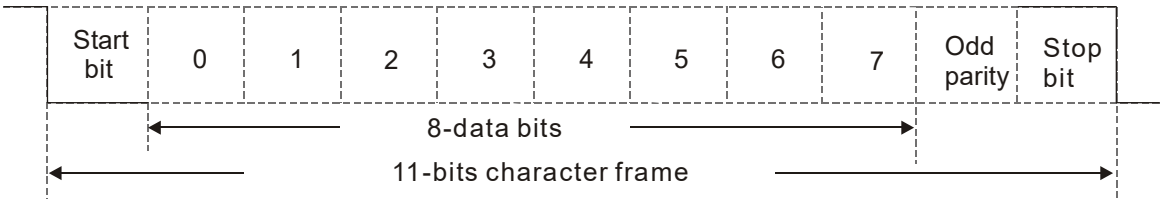

3. Communication Protocol

Communication Data Frame

ASCII mode :

STX	Start character = ':' (3AH)
Address Hi	Communication address: 8-bit address consists of 2 ASCII codes
Address Lo	
Function Hi	Command code: 8-bit command consists of 2 ASCII codes
Function Lo	
DATA (n-1)	Contents of data: N x 8-bit data consist of 2n ASCII codes N ≤ 16, maximum of 32 ASCII codes (20 sets of data)
…….	
DATA 0	
LRC CHK Hi	LRC check sum: 8-bit check sum consists of 2 ASCII codes
LRC CHK Lo	
END Hi	End characters: END Hi = CR (0DH), END Lo = LF (0AH)
END Lo	

RTU mode:

START	A silent interval of more than 10 ms
Address	Communication address: 8-bit address
Function	Command code: 8-bit command
DATA (n-1)	Contents of data: N × 8-bit data, n ≤16
…….	
DATA 0	
CRC CHK Low	CRC check sum: 16-bit check sum consists of 2 8-bit characters
CRC CHK High	
END	A silent interval of more than 10 ms

Communication Address (Address)

00H: broadcast to all hybrid servo drives

01H: hybrid servo drive of address 01

0FH: hybrid servo drive of address 15

10H: hybrid servo drive of address 16

:

FEH: Hybrid servo drive of address 254

Function code (Function) and DATA (Data characters)

03H: read data from register

06H: write single register

Example: reading continuous 2 data from register address 2102H, AMD address is 01H.

ASCII mode:

Command Message:

STX	':'
Address	'0'
	'1'
Function	'0'
	'3'
Starting register	'2'
	'1'
	'0'
	'2'
Number of register (count by word)	'0'
	'0'
	'0'
	'2'
LRC Check	'D'
	'7'
END	CR
	LF

Response Message

STX	':'
Address	'0'
	'1'
Function	'0'
	'3'
Number of register (count by byte)	'0'
	'4'
Content of starting register 2102H	'1'
	'7'
	'7'
	'0'
Content of register 2103H	'0'
	'0'
	'0'
	'0'
LRC Check	'7'
	'1'
END	CR
	LF

RTU mode:

Command Message:

Address	01H
Function	03H
Starting data register	21H
	02H
Number of register (count by world)	00H
	02H
CRC CHK Low	6FH
CRC CHK High	F7H

Response Message

Address	01H
Function	03H
Number of register (count by byte)	04H
Content of register address 2102H	17H
	70H
Content of register address 2103H	00H
	00H
CRC CHK Low	FEH
CRC CHK High	5CH

06H: single write, write single data to register.

Example: writing data 6000 (1770H) to register 0100H. AMD address is 01H.

ASCII mode:

Command Message:

STX	':'
Address	'0'
	'1'
Function	'0'
	'6'
Target register	'0'
	'1'
	'0'
	'0'
Register content	'1'
	'7'
	'7'
	'0'
LRC Check	'7'
	'1'
END	CR
	LF

Response Message

STX	':'
Address	'0'
	'1'
Function	'0'
	'6'
Target register	'0'
	'1'
	'0'
	'0'
Register content	'1'
	'7'
	'7'
	'0'
LRC Check	'7'
	'1'
END	CR
	LF

RTU mode:

Command Message:

Address	01H
Function	06H
Target register	01H
	00H
Register content	17H
	70H
CRC CHK Low	86H
CRC CHK High	22H

Response Message

Address	01H
Function	06H
Target register	01H
	00H
Register content	17H
	70H
CRC CHK Low	86H
CRC CHK High	22H

10H: write multiple registers (write multiple data to registers) (at most 20 sets of data can be written simultaneously)

Example: Set the multi-stage speed of hybrid servo drive (address is 01H):

Pr.04-00 = 50.00 (1388H), Pr.04-01 = 40.00 (0FA0H)

ASCII Mode

Command Message:

STX	':'
ADR 1	'0'
ADR 0	'1'
CMD 1	'1'
CMD 0	'0'
Target register	'0'
	'5'
	'0'
	'0'
Number of register (count by word)	'0'
	'0'
	'0'
	'2'
Number of register (count by Byte)	'0'
	'4'
The first data content	'1'
	'3'
	'8'
	'8'
The second data content	'0'
	'F'
	'A'
	'0'
LRC Check	'9'
	'A'
END	CR
	LF

Response Message

STX	':'
ADR 1	'0'
ADR 0	'1'
CMD 1	'1'
CMD 0	'0'
Target register	'0'
	'5'
	'0'
	'0'
Number of register (count by word)	'0'
	'0'
	'0'
	'2'
LRC Check	'E'
	'8'
END	CR
	LF

RTU mode:

Command Message:

ADR	01H
CMD	10H
Target register	05H
	00H
Number of register (Count by word)	00H
	02H
Quantity of data (Byte)	04
The first data content	13H
	88H
The second data content	0FH
	A0H
CRC Check Low	'9'
CRC Check High	'A'

Response Message:

ADR	01H
CMD 1	10H
Target register	05H
	00H
Number of register (Count by word)	00H
	02H
CRC Check Low	41H
CRC Check High	04H

Check sum

ASCII mode:

LRC (Longitudinal Redundancy Check) is calculated by summing up, module 256 and the values of the bytes from ADR1 to last data character then calculating the hexadecimal representation of the 2's-complement negation of the sum.

For example:

01H + 03H + 21H + 02H + 00H + 02H = 29H, the 2's-complement negation of 29H is **D7**H.

RTU mode:

CRC (Cyclical Redundancy Check) is calculated by the following steps:

Step 1: Load a 16-bit register (called CRC register) with FFFFH.

Step 2: Exclusive OR the first 8-bit byte of the command message with the low order byte of the 16-bit CRC register, putting the result in the CRC register.

Step 3: Examine the LSB of CRC register.

Step 4: If the LSB of CRC register is 0, shift the CRC register one bit to the right with MSB zero filling, then repeat step 3. If the LSB of CRC register is 1, shift the CRC register one bit to the right with MSB zero filling, Exclusive OR the CRC register with the polynomial value A001H, then repeat step 3.

Step 5: Repeat step 3 and 4 until eight shifts have been performed. When this is done, a complete 8-bit byte will be processed.

Step 6: Repeat step 2 to 5 for the next 8-bit byte of the command message. Continue doing this until all bytes are processed. The final contents of the CRC register are the CRC value. When transmitting the CRC value in the message, the upper and lower bytes of the CRC value must be swapped, i.e. the lower order byte will be transmitted first.

The following is an example of CRC generation using C language. The function takes two arguments:

Unsigned char* data ← a pointer to the message buffer

Unsigned char length ← the quantity of bytes in the message buffer

The function returns the CRC value as a type of unsigned integer.

```
Unsigned int crc_chk(unsigned char* data, unsigned char length)
 {
        int j;
        unsigned int reg_crc=0Xffff;
        while(length--){
              reg_crc ^= *data++;
              for(j=0;j<8;j++){
                    if(reg_crc & 0x01){   /* LSB(b0)=1 */
                          reg_crc=(reg_crc>>1) ^ 0Xa001;
                    }else{
                          reg_crc=reg_crc >>1;
                    }
              }
        }
        return reg_crc;                          // return register CRC
  }
```

4. Address list

Content	Register	Function	
Hybrid servo drive parameters	GGnnH	GG means parameter group, nn means parameter number, for example, the address of Pr.04-01 is 0401H.	
Command write only	2000H	bit 1~0	00B: No function
			01B: Stop
			10B: Run
			11B: Enable JOG
		bit 3~2	Reserved
		bit 5~4	00B: No function
			01B: FWD
			10B: REV
			11B: Change direction
		bit 14~13	00B: No function
			01B: Operated by digital keypad
			10B: Operated by Pr.00-21
			11B: Change source of operation command
		bit 15	Reserved
	2001H	Frequency command(Set Pr.00-06=0, Input XXX.XX Hz)	
	2002H	bit 0	1: EF (external fault) on
		bit 1	1: Reset
		bit 2	1: B.B ON
		bit 15~3	Reserved
Status monitor read only	2100H	High byte: Warn code Low Byte: Error code	
	2101H	bit 1~0	Hybrid servo drive operation status 00B: Drive stops 01B: Drive decelerating 10B: Drive standby 11B: Drive in operation
		bit 2	1: Reserved
		bit 4~3	Operation direction 00B: FWD run 01B: From REV run to FWD run 10B: From FWD run to REV run 11B: REV run
		bit 8	1: Master frequency controlled by communication interface
		bit 9	1: Master frequency controlled by analog signal or external input terminals.
		bit 10	1: Operation command controlled by communication interface
		bit 11	1: Parameter locked
		bit 12~15	Reserved
	2102H	Frequency command (XXX.XX Hz)	
	2103H	Output frequency (XXX.XX Hz)	
	2104H	Output current (XX.XX A).	
	2105H	DC bus voltage (XXX.X V)	
	2106H	Output voltage (XXX.X V)	
	2107H	Reserved	
	2108H	Reserved	
	2116H	Multi-function display (Pr.00-04)	
	2200H	Display output current (A)	
	2201H	Reserved	
	2202H	Actual output frequency (XXX.XX Hz)	
	2203H	DC bus voltage (XXX.X V)	
	2204H	Output voltage (XXX.X V)	
	2205H	Power angle (XXX.X)	
	2206H	Display actual motor speed kW of U, V, W (XXXXX kW)	
	2207H	Display motor speed in rpm estimated by the drive or encoder feedback (XXXXX rpm) (Pr.00-04 #7)	
	2208H	Display positive / negative output torque in %, estimated by the motor drive (t0.0: positive torque, -0.0: negative torque) (XXX.X %)	

Content	Register	Function
		(Pr.00-04 #8)
	2209H	Display PG feedback (Pr.00-04 #9)
	220AH	Reserved
	220BH	Display the signal value of the analog input terminal PS with 4~20mA/ 0~10V mapped to 0~100%
	220CH	Display the signal value of the analog input terminal PI with 0~10V mapped to 0~100%
	220DH	Display the signal value of the analog input terminal AUI with -10~10V mapped to -100~100%
	220EH	Display the temperature of the power module IGBT (XXX.X °C)
	220FH	Display the temperature of the power capacitor (XXX.X °C)
	2210H	Display the status of digital input (ON / OFF)
	2211H	Display the status of digital output (ON / OFF)
	2212H	Reserved
	2213H	The corresponding CPU pin status of digital input (d.)
	2214H	The corresponding CPU pin status of digital output (O.)
	2215H	Reserved
	2216H	Reserved
	2217H	Reserved
	2218H	Reserved
	2219H	Display the signal value of the analog input terminal QI with 0~10V mapped to 0~100%
	221AH	Display the actual pressure value (XXX.X Bar)
	221BH	Display the kWh value (XXX.X kWh)
	221CH	Display the motor temperature (XXX.X °C)
	221DH	Over load rate of hybrid servo drive (XXX.X %)
	221EH	Over load rate of motor with last digit A of HES (XXX.X %)
	221FH	Display current at braking (XXX A)
	2220H	Display temperature of the braking chopper (XXX.X °C)

5. Exception response:

When drive is doing communication connection, if an error occurs drive will respond the error code and set the highest bit (bit 7) of code to 1 (function code AND 80H) then response to control system to know that an error occurred.

If keypad displays “CE-XX” as a warning message, “XX” is the error code at that time. Please refer to the meaning of error code in communication error for reference.

Example:

ASCII mode:

STX	‘:’
Address	‘0’
	‘1’
Function	‘8’
	‘6’
Exception code	‘0’
	‘2’
LRC CHK	‘7’
	‘7’
END	CR
	LF

RTU mode:

Address	01H
Function	86H
Exception code	02H
CRC CHK Low	C3H
CRC CHK High	A1H

The explanation of exception codes:

Exception code	Explanation
1	Function code is not supported or unrecognized.
2	Address is not supported or unrecognized.
3	Data is not correct or unrecognized.
4	Fail to execute this function code

04-05 Delay Time of Communication Response

Factory Setting: 2.0

Settings 0.0~200.0 ms

This parameter is the response delay time after hybrid servo drive receives communication command as shown in the following.

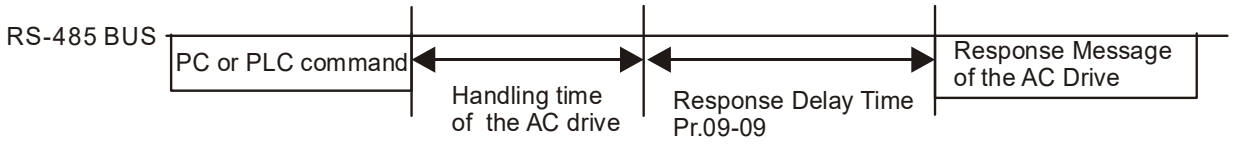

04-06 Main Frequency of the Communication

Factory Setting: 60.00

Settings 0.00~599.00 Hz

When Pr.00-20 is set to 1 (RS-485 communication). The hybrid servo drive will save the last frequency command at Pr.04-06 when abnormal turn-off or momentary power loss.

After rebooting the power, if no new frequency command is given, the hybrid servo drive will continue to run by using the frequency set at Pr.04-06.

04-07	Block Transfer 1
04-08	Block Transfer 2
04-09	Block Transfer 3
04-10	Block Transfer 4
04-11	Block Transfer 5
04-12	Block Transfer 6
04-13	Block Transfer 7
04-14	Block Transfer 8
04-15	Block Transfer 9
04-16	Block Transfer 10

Factory Setting: 0.00

Settings 0.00~655.35

There is a group of block transfer parameter available in the hybrid servo drive (Pr.04-07 to Pr.04-16). Through communication code 03H, you can use them (Pr.04-07 to Pr.04-16) to save those parameters that you want to read.

04-17 CANopen Slave Address

Factory Setting: 0

Settings
0: Disable
1~127

04-18 CANopen Speed

Factory Setting: 0

Settings
0) 1 Mbps
1) 500 kbps
2) 250 kbps
3) 125 kbps
4) 100 kbps (Delta only)
5) 50 kbps

04-19 CANopen Warning Record

Factory Setting: 0

Settings
bit 0: CANopen software disconnection 1 (CANopen Guarding Time out)
bit 1: CANopen software disconnection 2 (CANopen Heartbeat Time out)
bit 2: CANopen SYNC time out
bit 3: CANopen SDO time out
bit 4: CANopen SDO buffer overflow
bit 5: CANopen hardware disconnection warning (CAN bus Off)
bit 6: Error protocol of CANopen
bit 8: The setting values of CANopen indexes fail.
bit 9: The setting value of CANopen address fails.
bit10: The checksum value of CANopen indexes fail.

04-20 CANopen Decoding Method

Factory Setting: 1

Settings 0: Delta defined decoding method

1: CANopen Standard DS402 protocol

04-21 CANopen Communication Status

Factory Setting: Read Only

Settings 0: Node Reset State

1: Com Reset State

2: Boot up State

3: Pre-Operation State

4: Operation State

5: Stop State

04-22 CANopen Control Status

Factory Setting: Read Only

Settings 0: Not ready for use state

1: Inhibit start state

2: Ready to switch on state

3: Switched on state

4: Enable operation state

7: Quick stop active state

13: Error reaction activation state

14: Error state

04-23 Reserved

04-24 Communication Decoding Method

Factory Setting: 1

Settings 0: Decoding method 1

1: Decoding method 2

		Decoding Method 1	Decoding Method 2
Source of Operation Control	Digital Keypad	Digital keypad controls the drive action regardless decoding method 1 or 2.	
	External Terminal	External terminal controls the drive action regardless decoding method 1 or 2.	
	RS-485	Refer to address: 2000h~20FFh	Refer to address: 6000h ~ 60FFh
	CANopen	Refer to index: 2020-01h~2020-FFh	Refer to index:2060-01h ~ 2060-FFh

04-25 CAN: multi-pump application mode

Factory Setting: 1

Settings	0: EST master broadcasting mode (single master-multiple slaves) 1: EST multiple master mode (dual master-dual slave)

04-26 CAN: customized third-party controller definition

Factory Setting: 0

Settings	0: Disable customized protocol 1: Enable KEBA customized protocol 22: Enable EST customized protocol

04-27 Incorrect diagnosis of slave (pumps) on the number of slave (pumps).

Factory Setting: 0

Settings	0~20 0: Disable the slave (pump) diagnosis function.

05 Special application Parameters

✓ You can set this parameter during operation

05-00 Flow rate rising time at flow rate mode

Factory Setting: 80

Settings 0~1000ms

05-01 Flow rate decreasing time at flow rate mode

Factory Setting: 80

Settings 0~1000ms

✓ 05-02 Switching point of ASR low speed

Factory Setting: 5.00

Settings 0.00~160.00Hz

📖 When you enable the ASR frequency feedback switch or the ASR frequency switch, the drive turns to the low- speed ASR parameters when the frequency is lower than the setting at Pr.05-02.

✓ 05-03 Switching point of ASR high speed

Factory Setting: 10.00

Settings 0.00~160.00Hz

📖 When you enable the ASR frequency feedback switch or the ASR frequency switch, the drive turns to the high-speed ASR parameters when the frequency is higher than the setting at Pr.05-03.

05-04 Low speed bandwidth

Factory Setting: 20

Settings 1~200Hz

05-05 Low speed ASR gain

Factory Setting: 10

Settings 0~40

📖 Models of 110kW (included) and above: factory setting is 20% of the rated motor.

05-06 Low speed ASR integral time

Factory Setting: 0.100

Settings 0.001~10.000

05-07 High speed bandwidth

Factory Setting: 20

Settings 1~200Hz

05-08 High speed ASR gain

Factory Setting: 10

Settings 0~40

05-09 High speed ASR integral time

Factory Setting: 0.100

Settings 0.001~10.000 ms.

05-10 Pressure variation detection level

Factory Setting: 0.0

Settings 0.0~100.0

Chapter 5 Methods of Anomaly Diagnosis

5-1 Unusual signal

5-2 Dynamic fault processing and troubleshooting

5-3 Resolution for electromagnetic noise and induction noise

5-4 Environment and facilities for installation

The hybrid servo drive can display warning messages such as over voltage, low voltage, and over current and equipped with the protection function. Once any malfunction occurs, the protection function will be enabled and the hybrid servo drive will stop its input, followed by the action of the anomaly connection point and stopping of the servo oil pump. Please refer to the cause and resolution that corresponds to the error message displayed by the hybrid servo drive for troubleshooting. The error record will be stored in the internal memory of the hybrid servo drive (up to the last six error messages) and can be read by the digital keypad or communication through parametric readout.

CAUTION	☑ Upon the occurrence of anomaly, wait for five seconds after the anomaly is resolved before pressing the RESET button. ☑ Verify that the power indicator is off before opening the machine cover and starting the inspection.

5-1 Unusual Signal

5-1-1 Indicator Display

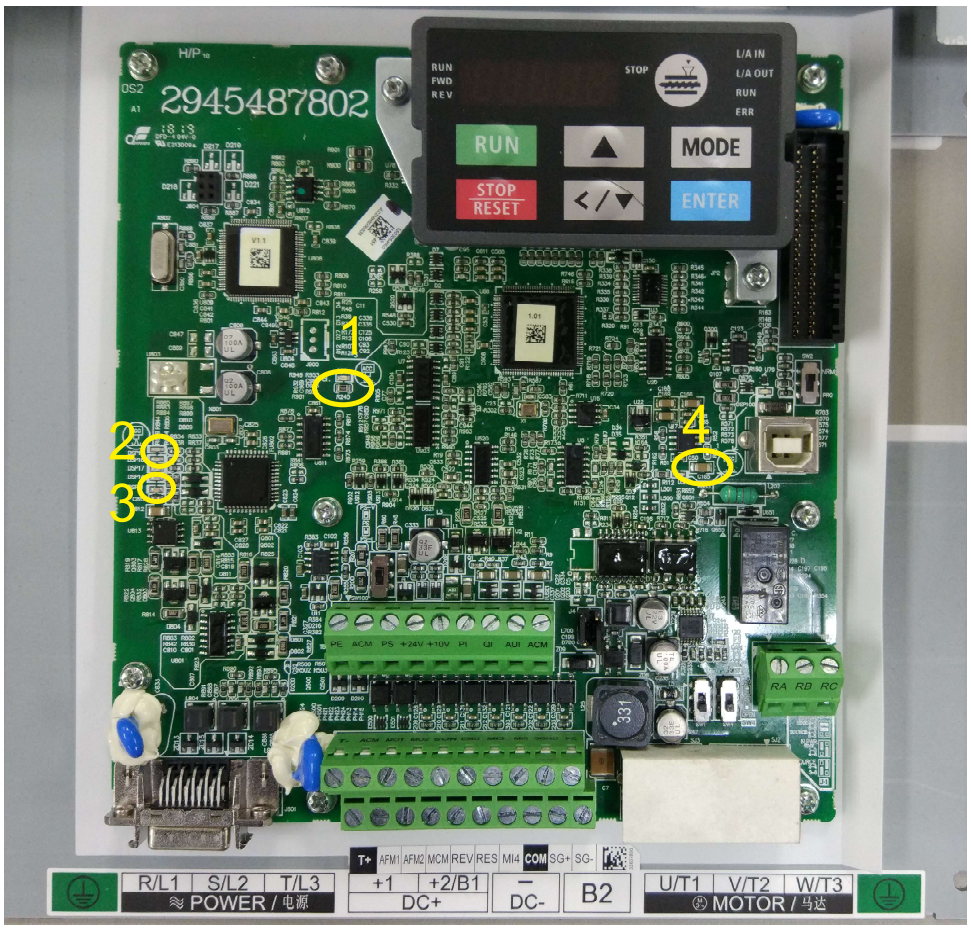

1: Power Indicator, 2: Encoder Feedback Indicator,
3: Encoder Feedback Warning Indicator, 4: Brake Indicator

Here are two images of KPVJ-LE02 displaying unusual signals. On the left, it shows the number of the unusual signals. On the right, it shows the name of the unusual signal. The KPVJ-LE02 switches automatically back and forth between these two ways of displaying the unusual signal.

- <E> = Error, press the RESET button to clear the error.
- <F> = Fault, power off the hybrid servo drive, wait for 3 minutes before you repower on the servo drive
- <A> = Alarm.

5-1-2 Error Messages Displayed on Digital Operation Panel KPVJ-LE02

No.	Display Code	Fault Description	Troubleshooting	Fault codes defined by Delta (2021H Low Byte)	CANopen Fault Register (1001H bit 0~7)	DS402 Fault Codes (603FH)
E1	ocA	Over current occurs in acceleration; output current exceeds by three times the rated current of the drive. (ocA)	1. Check if the insulation of the wire from U-V-W to the hybrid servo motor is bad. 2. Check if the hybrid servo motor is stalled. 3. Such errors occur when the red light of PG card flashes. The causes of these errors could be loose contact/ disconnection between encoder, motor drive and motor. 4. When such errors occur at the beginning, during or at the end of pressure/ flow command ● Adjust also the ramp up/down rate of pressure/flow command (Pr00-29 to Pr00-32) or ● Adjust the pressure/ flow reference time (Pr00-46~ Pr00-49) or ● Adjust the slope from the hybrid servo drive. 5. When such errors occur while pressure/ flow command is constant, adjust PI value (Pr.00-20 ~ Pr.00-25). 6. Make sure if there is any disturbance/ noise, set Pr00-04: #11 (Pressure feedback), #12(Pressure command), #25 (flow rate command). Then observe if the values fluctuate. 7. Replace the hybrid servo drive with a larger output capacity model.	0001H	1	2213H
E2	ocd	Over current occurs in deceleration; output current exceeds by three times the rated current of the drive. (ocd)		0002H	1	2213H
E3	ocn	Over current occurs during constant speed. Output current exceeds by three times the rated current of the drive. (ocn)		0003H	1	2214H
E4	GFF	Ground fault: Ground wire protection applies when one of the output terminals are grounded and the ground current is higher than its rated value by over	1. Check the wire of hybrid servo motor is shorted or grounded. 2. Check if IGBT power module is damaged 3. Check if the output side wire has bad insulation.	0004H	1	2240H

No.	Display Code	Fault Description	Troubleshooting	Fault codes defined by Delta (2021H Low Byte)	CANopen Fault Register (1001H bit 0~7)	DS402 Fault Codes (603FH)
		80%. Note that this protection is only for hybrid servo drive and not for human. (GFF)				
E5	occ occ	IGBT short circuit between upper and lower bridge. (occ)	Short-circuit is detected between the upper and lower bridge of the IGBT module. Check the motor wiring. Cycle the power, if occ still exists, return to the factory for repair.	0005H	2	2250H
E6	ocS ocS	Over-current or hardware failure in current detection at Stop. (ocs)	Send back to manufacturer for repair.	0006H	1	2214H
E7	ovA ovA	DC bus over-voltage during acceleration. (ovA)	230V: DC 415V 460V: DC 830V 1. Check if the input voltage is within the range of voltage rating of Hybrid Servo Drive and monitor for any occurrence of surge voltage. 2. The issue can be resolved by adjusting the software brake action level in Pr.02-00. 3. When such error occurred at the beginning, during or at the end of the pressure/ flow command, adjust Pr.00-29 ~Pr.00-32 <Ramp up/down rate of pressure/ flow command> or Pr00-46 ~Pr00-49 <Pressure/ flow reference S1/S2 time>	0007H	2	3210H
E8	ovd ovd	DC bus over-voltage during deceleration. (ovd)		0008H	2	3210H
E9	ovn ovn	DC bus over-voltage at constant speed. (ovn)		009H	2	3210H
E10	ovS ovS	Over voltage occurs at stop and hardware failure. (ovS)	Check if the input voltage is within the range of voltage rating of hybrid servo drive and monitor for any occurrence of surge voltage.	000AH	2	3210H

No.	Display Code	Fault Description	Troubleshooting	Fault codes defined by Delta (2021H Low Byte)	CANopen Fault Register (1001H bit 0~7)	DS402 Fault Codes (603FH)
E11	LvA LvA	DC bus voltage is lower than the setting at Pr02-07 during acceleration. (LvA)	1. Check if the voltage of input power is normal. 2. Check if there is any sudden heavy load. 3. Adjust the low voltage level in Pr.02-07. 4. Lvn often occurs when the motor drive has a power failure while the operating signals are still being sent.	000BH	2	3220H
E12	Lvd Lvd	DC bus voltage is lower than the setting in Pr02-07 during deceleration. (Lvd)		000CH	2	3220H
E13	Lvn Lvn	DC bus voltage is lower than the setting at Pr.02-07 when running at constant speed (Lvn)		000DH	2	3220H
E14	LvS LvS	DC bus voltage is lower than the setting at Pr.02-07 at stop (LvS)		000EH	2	3220H
E15	orP orP	Phase loss protection (orP)	Check if only single-phase power is sent or phase los occurs for three phase models	000FH	2	3130H
E16	oH1 oH1	IGBT's temperature exceeds the protection level (oH1)	1. Check if ambient temperature is too high. 2. Check if there is any foreign object on the heat sink and if the fan is running. 3. Check if there is enough space for air circulation for Hybrid Servo Drive	0010H	3	4310H
E17	oH2 oH2	Capacitors' temperature exceeds the protection level)	1. Check if ambient temperature is too high. 2. Check if there is any foreign object on the heat sink and if the fan is running. 3. Check if there is enough space for air circulation for hybrid servo drive	0012H	3	FF00H

No.	Display Code	Fault Description	Troubleshooting	Fault codes defined by Delta (2021H Low Byte)	CANopen Fault Register (1001H bit 0~7)	DS402 Fault Codes (603FH)
		(oH2)				
E18	tH1o	Hardware failure (tH1o)	Send back to manufacturer for repair.	0012H	8	FF00H
E19	tH2o	Hardware failure (tH2o)	Send back to manufacturer for repair.	0012H	8	FF01H
E20	oHF	IGBT overheated and cooling fan failure. (oHF)	Check the fan kit to see if it is blocked. Return to factory for repair.	0013H	4	FF02H
E21	oL	The hybrid motor drive detects excessive output current (oL)	1. Check if the hybrid servo motor is stalled. 2. Replace the hybrid servo drive with a larger output capacity model. 3. Set Pr00-04=29, observe if the value returns to zero after every molding cycle. If the number accumulates to 100, OL occurs 4. The causes of this error could be loose contact/ disconnection between encoder, servo drive and the motor. This error also occurs when a motor or an oil pump is stalled which make unusual rotating speed and over current.	0015H	1	2310H
E22	EoL1	Servo motor overload (EoL1)	1. Set Pr00-04=30 (v2.06 and above), observe if the value returns to zero after every molding cycle. If the number accumulates to 100, EoL occurs. Change the molding conditions. 2. Replace with the hybrid servo drive with a larger output capacity model. 3. If the pressure –flow is too high during the blending, such error occurs easily. To clear this error, decrease the pressure command and the flow command.	0016H	1	2310H
E24	oH3	(02-09 PTC level) Overheating inside the motor	1. Check if the motor drive is blocked. 2. Check if the ambient temperature is too high. 3. Increase the capacity of the motor drive.	0018H	3	FF20H

No.	Display Code	Fault Description	Troubleshooting	Fault codes defined by Delta (2021H Low Byte)	CANopen Fault Register (1001H bit 0~7)	DS402 Fault Codes (603FH)
		drive detected by hybrid servo drive, exceeding the protection level (Pr02-09 PTC level) (oH3).				
E30	cF1	Error on memory write-in (cF1)	Press RESET key to return all parameters to factory default values If the above does not work, send back to manufacturer for repair.	001EH	32	5530H
E31	cF2	Error on memory readout (cF2)		001FH	5	5530H
F32	cd0	Detection of abnormal output of three-phase total current (cd0)	Turn off the power and restart. If the same problem persists, send back to manufacturer for repair	0020H	2	FF03H
F33	cd1	Detection of abnormal current in phase U (cd1)		0021H	1	FF04H
F34	cd2	Detection of abnormal current in phase V (cd2)		0022H	1	FF05H
F35	cd3	Detection of abnormal current in phase W (cd3)		0023H	1	FF06H
F36	Hd0	Clamp current detection error (Hd0)	Turn off the power and restart. If the same problem persists, send back to manufacturer for repair.	0024H	5	FF07H
F37	Hd1	Over-current detection error (Hd1)		0025H	5	FF08H
F38	Hd2	Over-voltage detection error (Hd2)		0026H	5	FF08H
F39	Hd3	Ground current detection error (Hd3)	- The motor burns down or the insulation ages: Use a high resistance meter to	0027H	5	FF08H

No.	Display Code	Fault Description	Troubleshooting	Fault codes defined by Delta (2021H Low Byte)	CANopen Fault Register (1001H bit 0~7)	DS402 Fault Codes (603FH)
			measure the insulation resistance of the motor. If the insulation is poor, replace with a new motor. - Short circuit caused by the damaged cables. Troubleshoot the damaged parts or replace with new cables. - The stray capacitance between the cable and the ground terminal is large: If the length of the motor cable at the field is longer than 100 m in the field, decrease the setting value of the carrier frequency. Take steps to reduce the stray capacitance. - Faults caused by the noise interference. Verify the communication circuit wiring and the ground wiring. Separate the communication circuit wiring and or the ground wiring from the main circuit wiring or make a 90-degree wiring to reduce the noise interference. - Hardware failure. Verify if anything wrong on the motor, motor cable and measure motor cable length. Power off the hybrid servo drive, wait for 5 minutes and re-power on. If this fault code still pops up, contact Delta for technical support.			
E40	AuE AUE	Auto tuning error (AuE)	1. Check if the wiring of the motor is correct. 2. Check if the motor's parameter settings are correct.	0028H	1	FF21H
E42	PGF1 PGF1	PG feedback error (PGF1)	The actual rotating speed doesn't follow speed command and the elapsed time longer than one second. In this case, check if Pr01-30 Is not equal to zero and check PG feedback wiring.	002AH	7	7301H

No.	Display Code	Fault Description	Troubleshooting	Fault codes defined by Delta (2021H Low Byte)	CANopen Fault Register (1001H bit 0~7)	DS402 Fault Codes (603FH)
E43	PGF2 PGF2	PG feedback loss (PGF2)	Check the PG feedback wiring. It could be an open circuit.	002BH	7	7301H
E44	PGF3 PGF3	Stalled PG feedback (the actual rotating speed is 115% faster than the maximum speed and the elapsed time longer than one second) (PGF3)	1.Check the PG feedback wiring. 2.Check if PI gain and the settings for acceleration/ deceleration are suitable. 3.Check if there's an output phase loss. 4.The causes of these errors could be loose contact/ disconnection between encoder, hybrid servo motor drive and motor. (OC might also occur in different conditions.). 5.Check if the connection between oil pump and motor is stuck. 6.Send back to manufacturer for repair.	002CH	7	7301H
E45	PGF4 PGF4	PG slip error (PGF4)		002DH	7	7301H
E49	EF EF	When external terminals EF are closed, Hybrid servo drive stops its output (EF)	Troubleshoot and press the RESET button.	0031H	5	9000H
E50	EF1 EF1	When external EMG terminal is not connected to the heating switch of hybrid servo motor or the motor is overheated (130 ºC), hybrid servo drive stops its input (EF1)	Troubleshoot and press the RESET button.	0032H	5	9000H
F52	Pcod Pcod	Password is locked after three attempts (Pcod)	Shut down the servo drive, wait for certain time. Make sure that the power indicator is off. (≤ 22kW: wait for 5 min after shut down; ≥ 30kW: wait for 10 min after shut down). Then restart the servo drive and enter the right password	0034H	5	FF26H

No.	Display Code	Fault Description	Troubleshooting	Fault codes defined by Delta (2021H Low Byte)	CANopen Fault Register (1001H bit 0~7)	DS402 Fault Codes (603FH)
F53	ccod ccod	CPU fault (ccod)	Send back to manufacturer for repair.	0035H	4	7500H
E54	cE1 cE1	Illegal command (cE1)	Verify if the communication command is correct (Communication code must be 03, 06, 10)	0036H	4	7500H
E55	cE2 cE2	Illegal data address (cE2)	Verify if the communication data length is correct.	0037H	4	7500H
E56	cE3 cE3	Illegal data value (cE3)	Verify if the data value is bigger than the maximum or smaller than the minimum value.	0038H	4	7500H
E57	cE4 cE4	Data is written to read-only address (cE4)	Verify if the communication address is correct.	0039H	4	7500H
E58	cE10 cE10	Modbus transmission time-out (cE10)	Verify the wiring and grounding of the communication circuit. Press the RESET button on the keypad to clear this error code. If cE10 persists, send back to manufacturer for repair.	003AH	4	7500H
E60	bF bF	Brake transistor error (bF)	Press the RESET button on the keypad to clear this error code. If bF persists, send back to manufacturer for repair.	003BH	5	7110H
E65	PGF5 PGF5	Hardware error of PG card or magnetic pole tuning fault (PGF5)	Verify the setting of Pr.01-07 Motor Parameter Auto Tuning. If this fault is persistent, send it back to the manufacturer for repairing.	0041H	5	FF29H
E66	ovP ovP	Overpressure (ovP)	1. Check if the pressure sensor is working properly and if its specification is correct. 2. Adjust pressure PI control Pr.00-20~00-37. 3. Check if the wiring of pressure sensor is correct. 4. Check the position of SW100 dip switch (current type or open collector) on the control board if correct.	0042H	5	FF29H
E67	PfbF PFbF	Pressure feedback error (PfbF)	1. Check if the wiring of pressure sensor is correct. It could be open-circuit. 2. Check if the pressure sensor signal is	0043H	5	FF29H

No.	Display Code	Fault Description	Troubleshooting	Fault codes defined by Delta (2021H Low Byte)	CANopen Fault Register (1001H bit 0~7)	DS402 Fault Codes (603FH)
			below 1V.			
E68	Prev PrEu	Oil pump runs reversely (Prev)	1. Check if there's any zero shift at the pressure sensor. 2. Check if the wiring of pressure sensor is correct.	0044H	5	FF29H
E69	noil noIL	Oil shortage (noil)	1. Check the amount of oil in the oil tank. 2. Check if any leakage at hydraulic circuit. 3. If there's a suction filter installed at the oil inlet, check if that suction filter is blocked up.	0045H	5	FF29H
E70	tUP tUP	Business hours end. (tUP)	Send back to manufacturer for repair.	0046H	32	FF29H
E71	ocbs ocbS	Over current at braking chopper (ocbs)	1. Check if the braking chopper is short-circuit. 2. Is the resistance value too small? 3. Send back to manufacturer for repair.	0047H	1	FF29H
F72	bro bro	Braking resistor is open-circuit (bro)	Check if the braking resistor is open-circuit or properly wired?	0048H	32	FF29H
F73	brF brF	Braking resistor's resistance value is too small. (brF)	Check if the resistance value big enough?	0049H	32	FF29H
E74	oH4 oH4	Braking chopper overheated (oH4)	1. Check if there are too many times of deceleration and pressure releasing during formation period? 2. Modify formation period	004AH	3	FF29H
E75	tH4o tH4o	Error occurred on braking chopper's thermo-protection line (tH4o)	Send back to manufacturer for repair.	004BH	3	FF29H
E78	b.GFF b.GFF	The ground short is detected before running the servo drive, because all the	Only after this fault occurs for 5 seconds, you can reset the servo drive. If this fault is persistent, send it back to the manufacturer for repairing.	004Eh	2	0x2240H

No.	Display Code	Fault Description	Troubleshooting	Fault codes defined by Delta (2021H Low Byte)	CANopen Fault Register (1001H bit 0~7)	DS402 Fault Codes (603FH)
		upper arms or all the lower arms are turned on. (b.GFF)				
E79	A.oc	The U-phase short is detected before running the servo drive because U-phase and V-phase are turned on. (A.oc)	Only after this fault occurs for 5 seconds, you can reset the servo drive. If this fault is persistent, send it back to the manufacturer for repairing.	004Fh	2	0x2213H
E80	b.oc	The V-phase short is detected before running the servo drive because V-phase and W-phase are turned on. (b.oc)	Only after this fault occurs for 5 seconds, you can reset the servo drive. If this fault is persistent, send it back to the manufacturer for repairing.	0050h	2	0x2213H
E81	c.oc	The W-phase short is detected before running the servo drive because U-phase and W-phase are turned on. (c.oc)	Only after this fault occurs for 5 seconds, you can reset the servo drive. If this fault is persistent, send it back to the manufacturer for repairing.	0051h	2	0x2213H
E82	oPL1	Output Phase Loss on Phase U (oPL1)	1 Check if the wiring of motor to see if any loose or broken wires. 2. Check if the resistance of each phase is the same. 3. Use an ampere-meter to measure if the three-phase current is in balance. If this error code still pops up when it is in balance, send back to manufacturer for	0052H	2	FF29H
E83	oPL2	Output Phase Loss on Phase V (oPL2)		0053H	2	FF29H
E84	oPL3 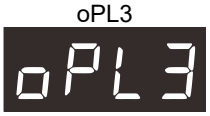	Output Phase Loss on Phase W (oPL3)		0054H	2	FF29H

No.	Display Code	Fault Description	Troubleshooting	Fault codes defined by Delta (2021H Low Byte)	CANopen Fault Register (1001H bit 0~7)	DS402 Fault Codes (603FH)
			repair. 4. Choose a motor and a servo drive which are compatible with each other.			
E87	oL3 oL3	Servo drive overloading while running at low frequency (oL3)	1. Reduce the ambient temperature of the operating drive. 2. Replace the drive with a larger power model. 3. Reset drive parameters or decrease carrier frequency. Send back to the manufacturer for repair if none of the above works.	0057H	2	2310H
E90	SLE SLE	Slave pump fault	Verify if any issue occurs on each slave pump. Troubleshoot those issues. Then press the RESET button to clear this fault code.	005Ah	1	0x00
E93	AUE.A AUE.A	The current at U-phase is too small. (The IGBT at U-phase is open circuit or an error occurs on the current sensor.)	1. Verify if the servo drive and the motor are properly connected 2. The magnetic contactor installed on the output side (U/V/W) of the servo drive is at open-circuit. Make sure that it must be at close-circuit.	005Dh	2	3210H
E94	AUE.b AUE.b	The current at V-phase is too small. (The IGBT at V-phase is open circuit or an error occurs on the current sensor.)	1. Verify if the servo drive and the motor are properly connected 2. The magnetic contactor installed on the output side (U/V/W) of the servo drive is at open-circuit. Make sure that it must be at close-circuit.	005Eh	2	3210H
E95	AUE.c AUE.c	The current at W-phase is too small. (The IGBT at W-phase is open circuit or an error occurs on the current sensor.)	1. Verify if the servo drive and the motor are properly connected 2. The magnetic contactor installed on the output side (U/V/W) of the servo drive is at open-circuit. Make sure that it must be at close-circuit.	005Fh	2	3210H
E96	AUE.P AUE.P	Error occurred on the encoder (cable connection error)	1. Verify if the encoder is properly connected to the servo drive and if the	0060h	128	7301H

No.	Display Code	Fault Description	Troubleshooting	Fault codes defined by Delta (2021H Low Byte)	CANopen Fault Register (1001H bit 0~7)	DS402 Fault Codes (603FH)
			parameters are correctly set. 2. Reboot the hybrid servo drive. 3. If this fault is persistent, sent it back to the manufacturer for repairing.			
E101	CGdE CGdE	Software error 1 occurred on CANopen (CGdE) (CANopen guarding error)	1. Increase guarding time (Index 100C). 2. Check the communication wiring and grounding. 90 degrees wiring layout or separation from main circuit is suggested to prevent interference. 3. Make sure the communication wiring is serial. 4. Use dedicated CANopen cable and install terminating resistor. 5. Check the status of communication cable or change new cable.	0065H	4	8130H
E102	CHbE CHbE	Software error 2 occurred on CANopen (CHbE) (CANopen heartbeat error.)	1. Increase Heart beat time (Index 1016). 2. Check the communication wiring and grounding. 90 degrees wiring layout or separation from main circuit is suggested to prevent interference. 3. Make sure the communication wiring is serial. 4. Use dedicated CANopen cable and install terminating resistor. 5. Check the status of communication cable or change new cable.	0066H	4	8130H
E104	CbFE CbFE	Hardware error occurred on CANopen (CbFE) (CANopen bus off error)	1. Re-install CANopen card. 2. Check the communication wiring and grounding. 90 degrees wiring layout or separation from main circuit is suggested to prevent interference. 3. Make sure the communication wiring is serial. 4. Use dedicated CANopen cable and install terminating resistor.	0068H	4	8140H

No.	Display Code	Fault Description	Troubleshooting	Fault codes defined by Delta (2021H Low Byte)	CANopen Fault Register (1001H bit 0~7)	DS402 Fault Codes (603FH)
			5. Check the status of communication cable or change new cable.			
E105	CIdE	Index setting error occurred on CANopen (CIdE) (CANopen index error)	Disable CANopen (Pr.04-17=0) Reset CANopen Index (Pr.04-17)	0069H	4	8100H
E106	CAdE	Slave # setting error occurred on CANopen (CAdE)	Disable CANopen (Pr.04-17=0) Reset CANopen Index (Pr.04-17)	006AH	4	8100H
E107	CFrE	CANopen Index is Out of Range (CFrE) CANopen (CANopen memory error)	Disable CANopen (Pr04-17=0) Reset CANopen Index (Pr04-17)	006BH	4	8100H

Reset Alarm:

Once the issue that tripped the system and triggers the alarm is eliminated, one can resume the system to normal status by pressing the RESET button on the digital keypad (as shown in the figure) to set the external terminal to "Anomaly reset command" and sending the command by turning on the terminal or via communication. Before any anomaly alarm is resolved, make sure the operation signal is at open circuit status (OFF) to avoid immediate machine running upon anomaly reset that may case mechanical damage or personnel casualty.

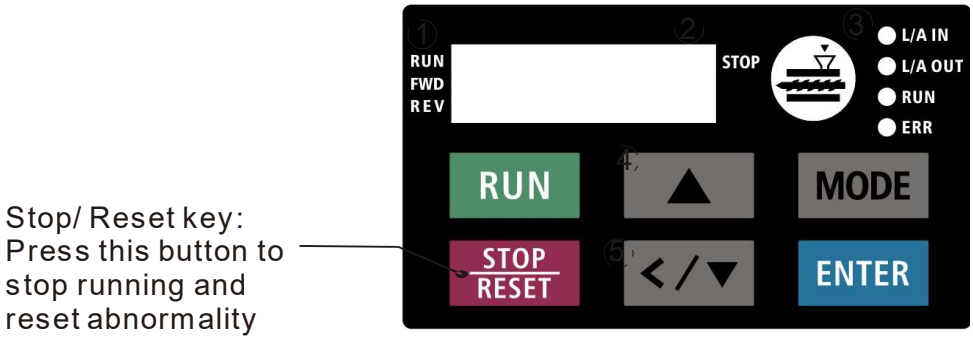

5-1-3 Warning Codes

No.	Display	Fault codes defined by Delta (2021H High Byte)	Descriptions
A1	CE 1	0001H	Modbus function code error (Illegal function code) (CE1) Corrective Actions ■ Check if the function code is correct. (Function code must be 03, 06, 10, 63)
A2	CE2	0002H	Modbus data address is error (Illegal data address (00 H to 254 H) (CE2) Corrective Actions ■ Check if the communication address is correct.
A3	CE3	0003H	Modbus data error (Illegal data value) (CE3) Corrective Actions ■ Check if the data value exceeds maximum / minimum value.
A4	CE4	0004H	Modbus communication error (Data is written to read-only address) (CE4) Corrective Actions ■ Check if the communication address is correct.
A5	CE 10	0005H	Modbus transmission time-out (CE10)
A6	CP 10	0006H	Keypad transmission time-out (CP10)
A7	SE 1	0007H	Keypad COPY error 1 (SE1) Keypad simulation error, including communication delays, communication error (keypad receives error FF86) and parameter value error.
A8	SE2	0008H	Keypad COPY error 2 (SE2) Keypad simulation done, parameter writes error.
A9	oH 1	0009H	IGBT is over-heated than protection level: 95°C (oH1) Corrective Actions ■ Ensure that the ambient temperature falls within the specified temperature range. ■ Make sure that the ventilation holes are not obstructed. ■ Remove any foreign objects from the heat sink and check for possible dirt in heat sink. ■ Provide enough spacing for adequate ventilation.

No.	Display	Fault codes defined by Delta (2021H High Byte)	Descriptions
A10	oH2	000AH	Motor drive is over-heated than protection level: 95ºC. This warning code is ONLY for frame E, NOT for other frames. (oH2) Corrective Actions ■ Ensure that the ambient temperature falls within the specified temperature range. ■ Make sure that the ventilation holes are not obstructed. ■ Remove any foreign objects from the heat sink and check for possible dirt in heat sink. ■ Provide enough spacing for adequate ventilation.
A11	PI d	000BH	PID feedback loss (PID)
A14	AUE	000EH	Motor parameters auto-tuning error (AuE) Corrective Actions ■ Check if motor wiring is correct. ■ Check if motor capacity and parameters are correct.
A15	PGFb	000FH	PG feedback error (PGFb) Corrective Actions ■ Check if the encoder's wiring is correct. ■ Check if PG card's red light is on because of some interferences.
A17	oSPd	0011H	Over speed warning (oSPd)
A18	dAuE	0012H	Over speed deviation warning (dAvE)
A19	PHL	0013H	Input Phase Loss (PHL)
A22	oH3	0016H	Motor over-heating (oH3)
A24	oSL	0018H	Over slip (oSL)
A25	tUn	0019H	Auto-tuning in process (tUn)
A26	FAn	001AH	Cooling fan jammed (FAn) Corrective Actions ■ Check if the cooling spins or not. ■ Clean the cooling fan

No.	Display	Fault codes defined by Delta (2021H High Byte)	Descriptions
A27	bP	001BH	The function of this warning code is to prevent oil pump from damaging while running without sucking in any hydraulic oil. When the hybrid servo drive goes from STOP to RUN, it starts to check if the pressure is over 0.5Bar within the time set at Pr.00-60. During this checking period, the servo drive refuses pressure command and flow command sent from keypad. The keypad displays bp (building pressure). If the pressure is still under 0.5bar after the checking period set at Pr.00-60, there will be an oil shortage warning and the hybrid servo drive will stop running. The keypad will display noil (no oil). If the pressure is over 0.5bar within the checking time set at Pr00-60, the hybrid servo drive continues to run normally. There won't be a bp warning. (bP) ※ This function is effective when Pr.00-27 <minimum pressure> is set as higher than 0.3% and the time setting at Pr.00-60 is NOT 0.
A28	oPHL	001CH	Output Phase Loss (oPHL)
A36	CGdn	0024H	Software error 1 occurred on CANopen (CGdn)
A37	CHbn	0025H	Software error 2 occurred on CANopen (CHbn)
A38	CSyn	0026H	CANopen Synchronization off (CSyn)
A39	CbFn	0027H	CANopen bus off (CbFn)
A40	CIdn	0028H	CANopen index error (CIdn)
A41	CAdn	0029H	CANopen station address error (CAdn)
A42	CFrn	002AH	CANopen memory error (CFrn)
A43	CSdn	002BH	CANopen SDO transmission time-out (CSdn)
A44	CSbn	002CH	CANopen SDO received register overflow (CSbn)

No.	Display	Fault codes defined by Delta (2021H High Byte)	Descriptions
A45	CbtN	002DH	CANopen boot up fault (CBtn)
A46	CPtN	002EH	CANopen protocol format error (CPtn)
A50	SFAn	0032H	Reminder of the maintenance of the cooling fan. (S.FAn)
A60	LrEL	003CH	Reminder of the remaining lifespan of the soft-start relay. (L.rEL)
A61	LFAn	003DH	Reminder of the remaining lifespan of the cooling fan. (L.FAn)

5-2 Dynamic fault processing and troubleshooting

5-2-1 Over Current (oc)

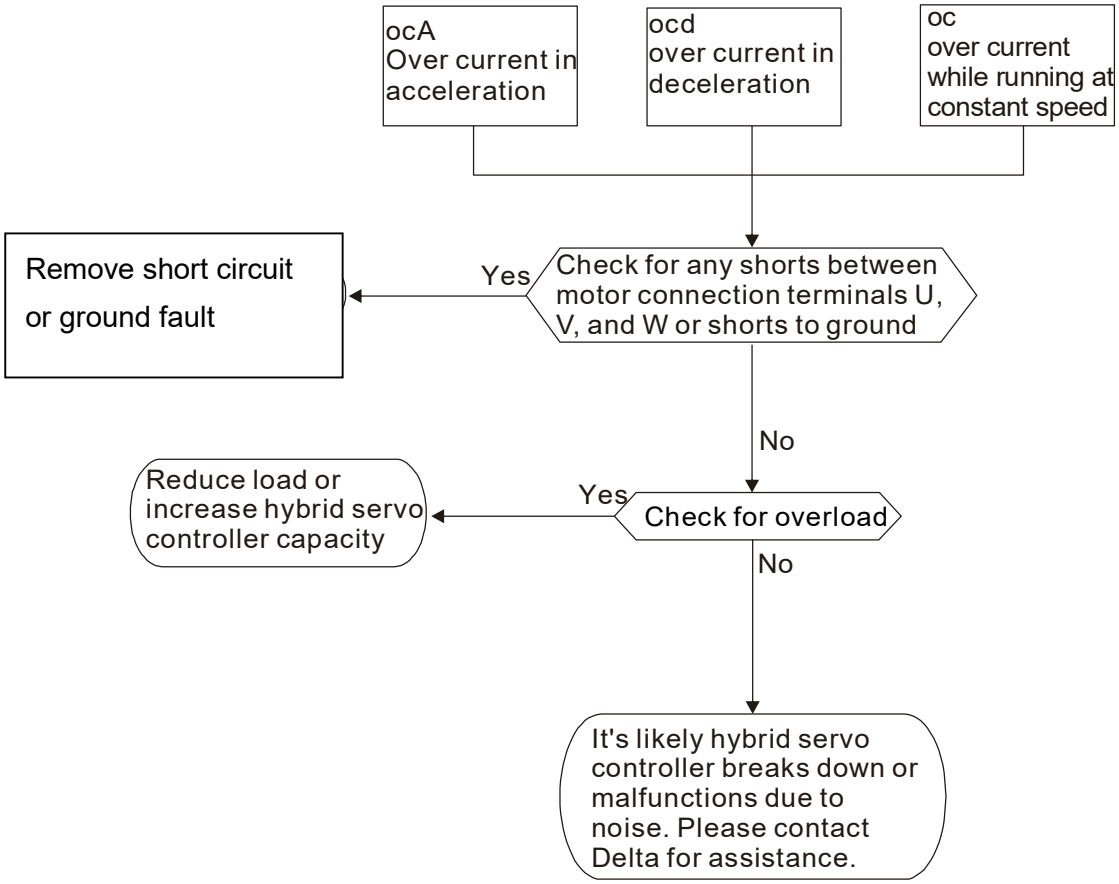

5-2-2 Ground Fault (GFF)

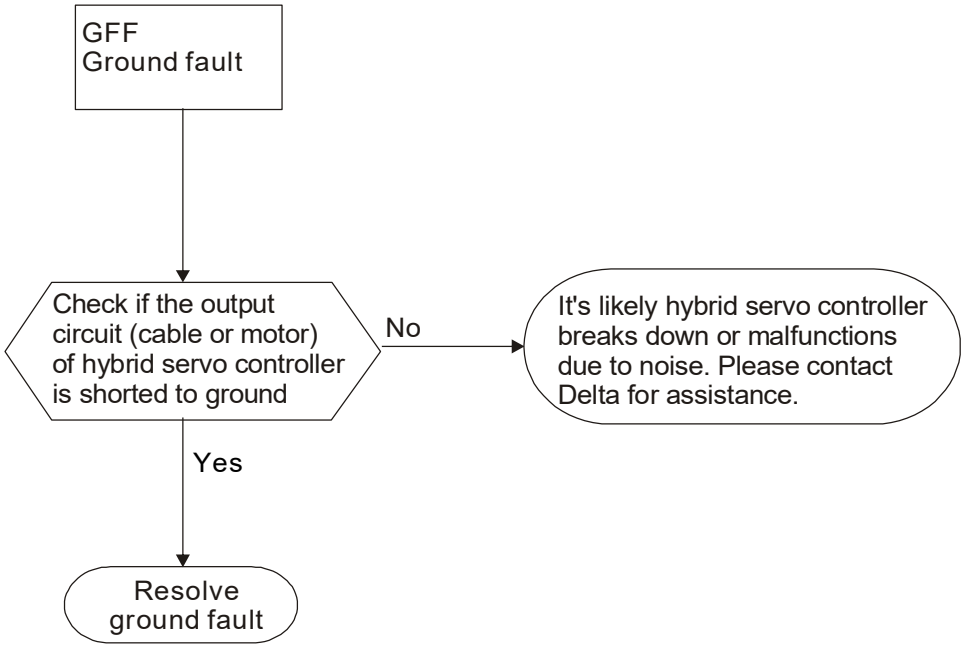

5-2-3 Over Voltage (ov)

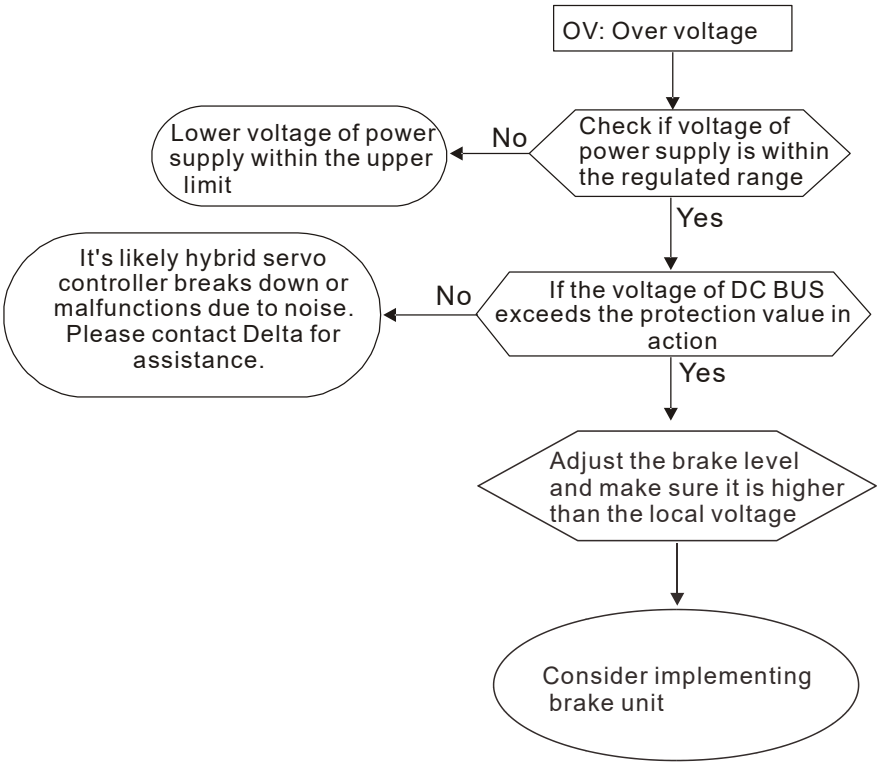

5-2-4 Low Voltage (Lv)

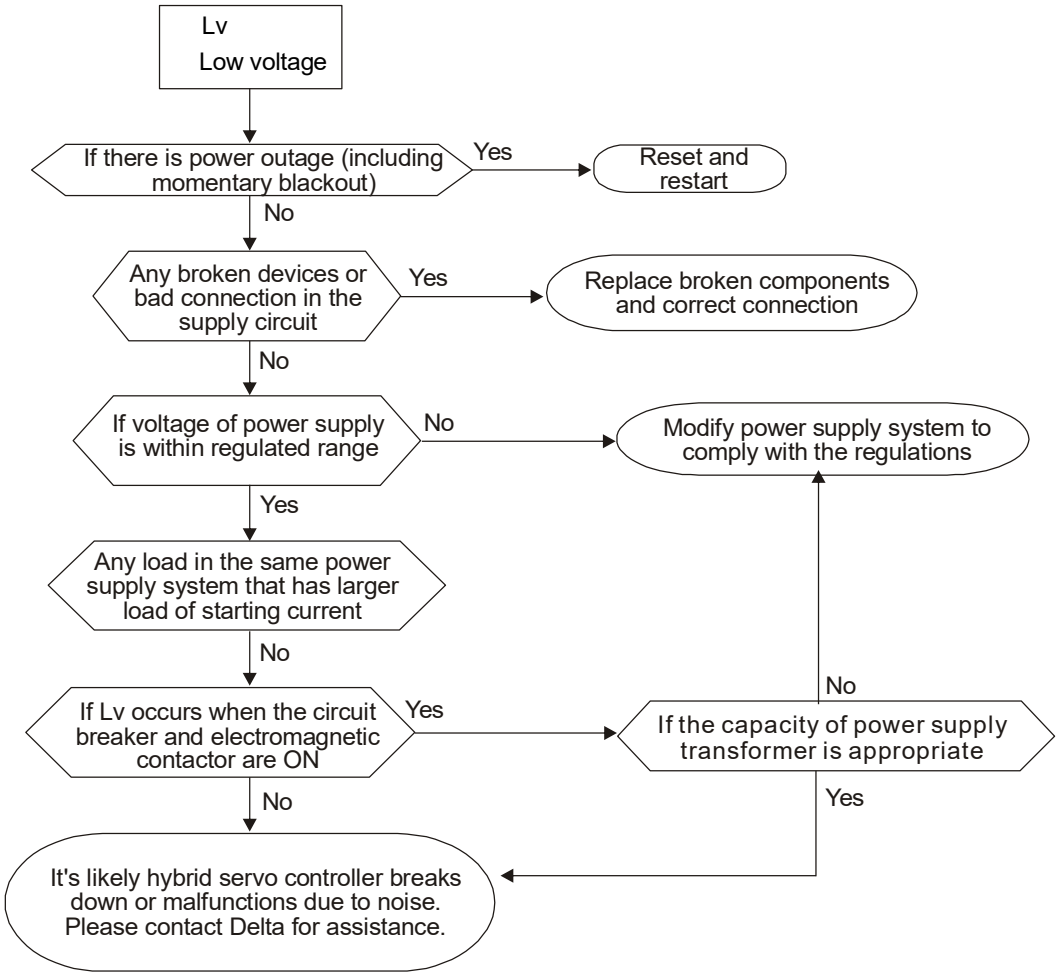

5-2-5 Over Heat (oH1)

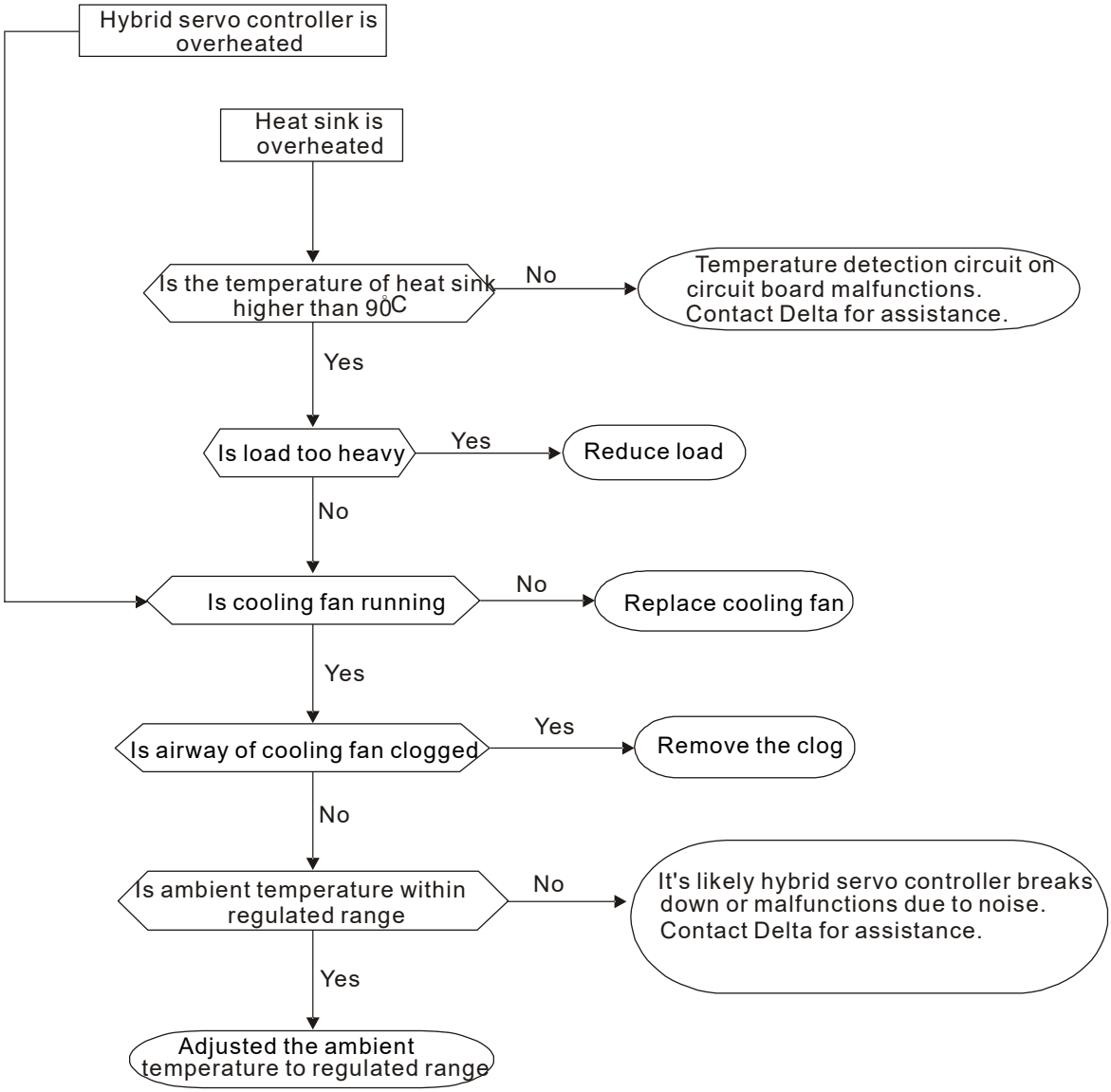

5-2-6 Overload (oL)

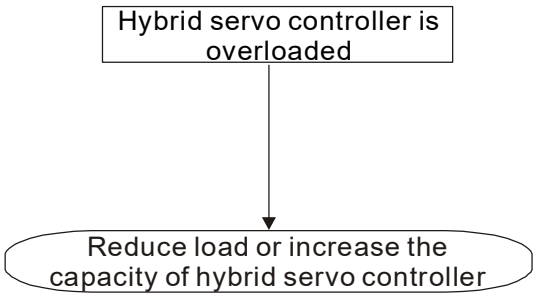

5-2-7 Phase Loss (PHL)

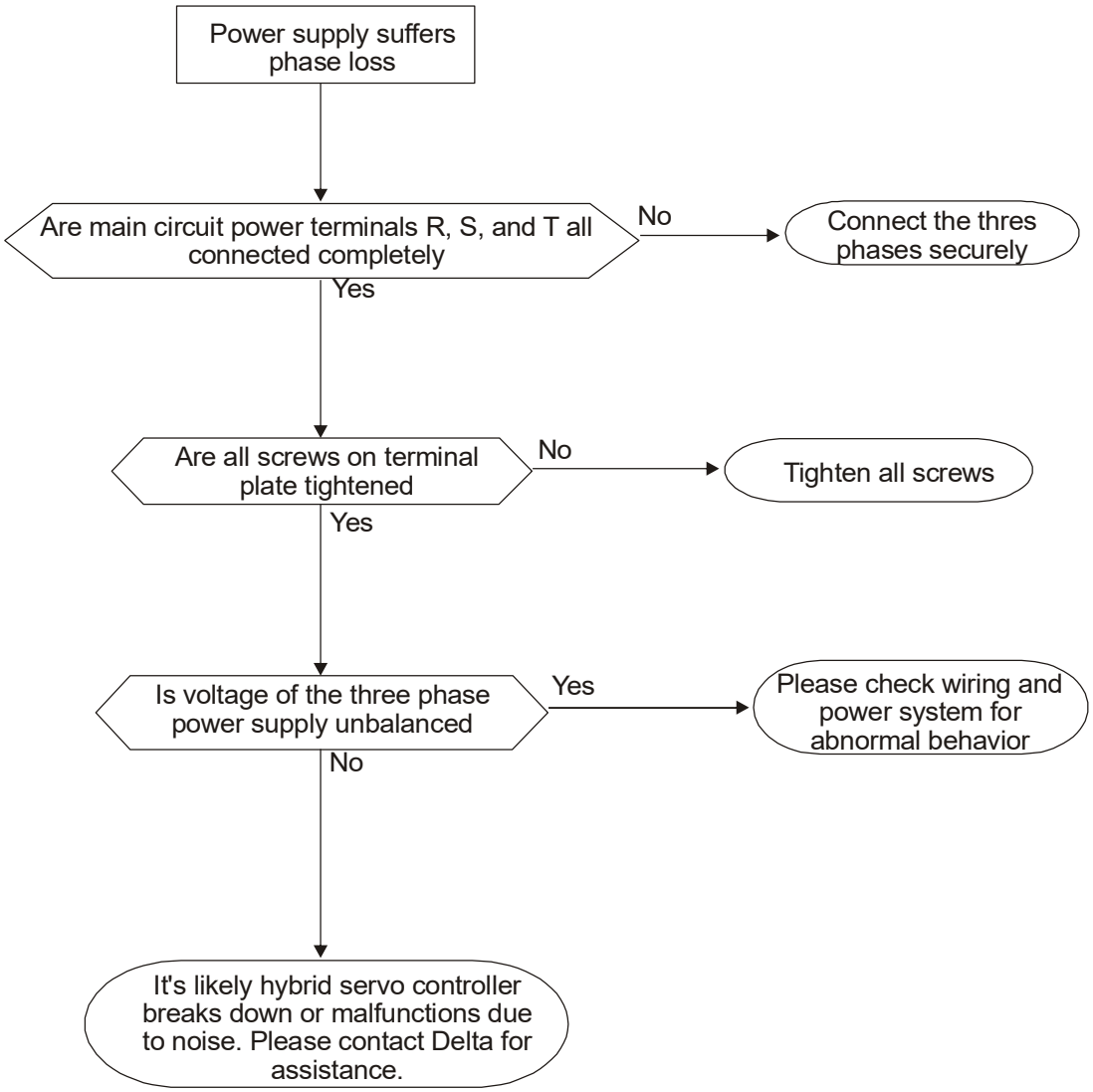

5-2-8 Hybrid servo drive overloading when running at low frequency (oL3)

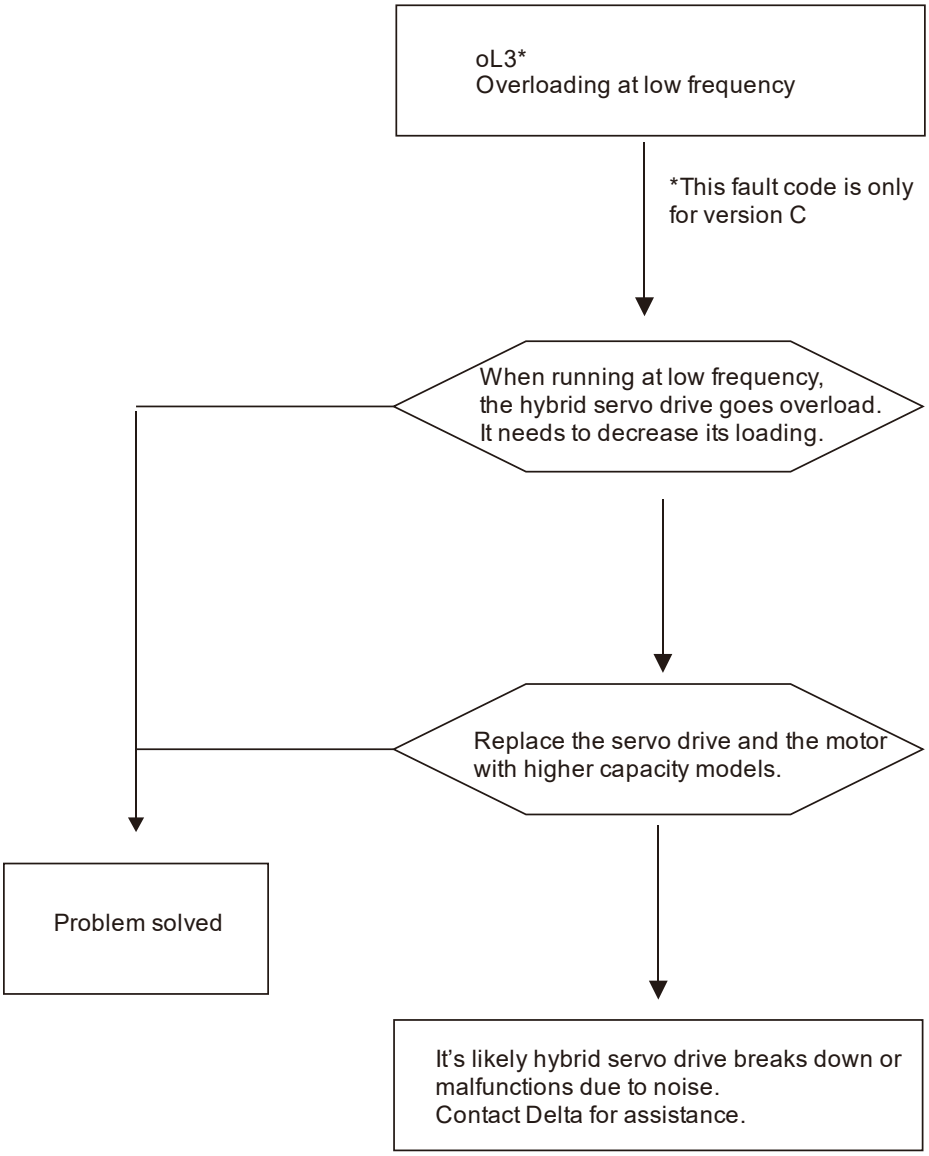

5-3 Resolution for electromagnetic noise and induction noise

If there exist noise sources around hybrid servo drive, they will affect hybrid servo drive through radiation or the power lines, leading to malfunction of control loop and causing tripping or even damage of hybrid servo drive. One natural solution is to make hybrid servo drive more immune to noise. However, it is not economical and the improvement is limited. It is best to resort to methods that achieve improvements outside hybrid servo drive.

1. Add surge killer on the relay or contact to suppress switching surge between ON/OFF.
2. Shorten the wiring length of the control circuit or serial circuit and separate from the main circuit wiring.
3. Comply with the wiring regulation for those shielded wire and use isolation amplifier for long wire.
4. The ground terminal of hybrid servo drive must be connected to ground by following the associated regulations. It must have its own ground connection and cannot share with electrical welder and other power equipment.
5. Insert noise filter to the input terminal of hybrid servo drive to prevent the noise entering from the power lines.

In a word, three-level solutions for electromagnetic noise are “no product”, “no spread” and “no receive”.

5-4 Environment and facilities for installation

The hybrid servo drive is a device for electronic components. Detailed descriptions of the environment suitable for its operation can be found in the specifications. If the listed regulations cannot be followed for any reason, there must be corresponding remedial measures or contingency solutions.

1. To prevent vibration, anti-vibration spacer is the last choice. The vibration tolerance must be within the specification. The vibration effect is equal to the mechanical stress and it cannot occur frequently, continuously or repeatedly to prevent damaging AC motor drive.
2. Store in a clean and dry location free from corrosive fumes/dust to prevent rustiness, poor contact. It also may cause short by low insulation in a humid location. The solution is to use both paint and dust-proof. For particular occasion, use the enclosure with whole-seal structure.
3. The ambient temperature must be just right. If the temperature is too high or too low, the lifetime and action reliability of electronic components will be affected. For semiconductor devices, once the conditions exceed the rated values, consequences associated with “damage” are expected. As a result, in addition to providing cooler and shades that block the direct sunlight that are aimed to achieve required ambient temperature, it is also necessary to perform cleaning and spot check the air filter in the storage tray of hybrid servo drive and the angle of cooling fan. Moreover, the microcomputer may not work at extremely temperature, space heater is needed for machines that are installed and operated in cold regions.
4. Avoid moisture and occurrence of condensation. If the hybrid servo drive is expected to be shut down for an extended period of time, be careful not to let condensation happen once the air conditioning is turned off. It is also preferred that the cooling equipment in the electrical room can also work as a dehumidifier.

5-5 Common Problems, Diagnosis and Troubleshooting

5-5-1 Hybrid Servo Controller Faults

(A) The controller is turned on, but the RUN light on the keypad is still off

Problem	Diagnosis	Troubleshooting
The controller is turned on but the RUN light is still off.	1. Verify if SON-COM connectors are conductive. (Use the resistance measurement on a multimeter to measure if SON-COM is conductive.) 2. Verify if Pr.01-01 =1 <Controlled by using the external terminals.>. 3. Set Pr,.01-01=0 <0: Controlled by using the digital keypad>. Press RUN key and see if RUN light is on.	1. Enable the conductivity between SON and COM. 2. Verify if position of SINK / SOURCE switching terminals is correct as shown in the image below. 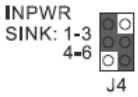 3. If controlling by keypad works properly, there might be fault on the control board I/O signal. Verify the wiring of the control board. If wiring is right, you might need to change a new control board. Contact Delta for technical support
Pr.01-37 <HES ID#> wasn't set.	1. Verify if Pr.00-02 = 0 <Reset parameter settings>. 2. Verify if the controller is running and see if the RUN light on the keypad is on. 3. Verify of the HES ID# in Pr.00-00 matches the HES ID# set in Pr.01-37	1. Set Pr.00-02= 0 2. Press STOP key or remove the wire between SON-COM 3. Contact Delta for technical support.
PGF1 fault	1. Verify if the ERR red light indicator on the PG card is on. If the red light is on, the PG card can't receive signal from motor encoder. 2. Verify if the encoder cable is properly wired. 3. Do a cross check by changing PG card and encoder cable.	1. Reinstall and tighten the wiring of the encoder cable. 2. Replace by a new encoder cable. 3. For VJ-A, change a new PG card. For VJ-C change a new control board.
bro fault (Open circuit on braking resistor)	1. Verify if the wiring of the braking resistance is correct. 2. Verify if the braking resistor installed on the hybrid servo controller matches the required braking resistance of the part specification. 3. Verify if the braking light flashes at powering on. If the braking light flashes at powering on, that means MCU sends the action signal.	1. Re-wire the braking resistor. 2. Contact Delta for technical support. 3. If the braking light is off, that means MCU doesn't send control signal, contact a local dealer or Delta. But if the bro fault still occurs when the braking light flashes, you might need to send the whole HES-C back to the factory for further inspection.
brF fault (Braking resistance is too small.)	1. Verify if the braking resistor installed on the hybrid servo controller matches the required braking resistance of the part specification. Measure the barking resistance to see if there is a big difference. 2. Verify if the wiring is correct.	1. Replace by a new braking resistor 2. Re-wire the braking resistor.
FAn fault (Cooling fan doesn't work.)	1.Verify if any cooling fan is installed or that cooling fan doesn't run. 2. Verify if any foreign object blocks the cooling fan or there's an accumulation of dust.	1. If there are two cooling fans, change and test the fans. If cooling fan1, which doesn't rotate still doesn't work after you switch it to another side. It's simply a malfunction cooling fan, replace it by new one. If cooling fan2, which rotates normally, stops rotating after you put it on another side, it might be a connector problem of the hybrid servo controller. Contact a local dealer or Delta to send back for repairing. 2 Remove the foreign objects or cleaning the dust on the fan.

(B) Power on the controller and enable the SON connector, but the RUN light on the keypad is constantly on.

Problem	Diagnosis	Troubleshooting
The digital keypad doesn't display.	Verify if the controller is running. If the controller is running, that means it works properly. Remove the cover to see if the keypad is installed correctly.	Remove and then reinstall the keypad. If the keypad still doesn't display, contact Delta.
	If the controller is not running, 1. Use a multimeter to verify if the three-phase input voltage is normal. (Set the multimeter to AC V function, point the test leads to the phases between R-S, S-T and T-R to measure the input voltage.) 2. For small capacity models, verify if the short-circuit plate is firmly installed between +1 and +2 terminals on the main circuit.	1. Supply normal input voltage. 2. Tighten the short-circuit plate between +1 and +2 terminals. 3. If the control board and the PG card function normally, it might be a keypad failure. Contact a local dealer or Delta for repairing.
Parameters cannot be set	1. Verify if you can set those parameters during operation. 2. Verify if Pr.00-02 = 1. 3. Verify if any fault on the keypad.	1. If that parameter cannot be set during operation, turn off the operation signal of the controller (disable SON-COM). 2. Power off the controller, then set Pr.00-02=0 <No function>. Now go set up the parameters which you need to set up but cannot be set during the operation. Once you finish setting those parameters, go set Pr.00-02 = 1 <Parameters locked>. 3. Contact a local dealer or Delta for keypad repairing.
EF1 fault occurs at powering on	1. Verify if the SINK / SOURCE mode switching terminals are at the position as shown in the image below 2. Verify if external terminals EMG-COM are enabled. 3. Verify if Pr.01-37 has any setting. This parameter is only for HES series.	1. The factory setting is SINK mode (Powered by the internal +24V supply). 2. Verify the setting of Pr.03-04. If the temperature protection is a Switch and it is set to be normally closed. Set Pr03-04=4 before you wiring. Now you can clear the EF1 fault shown on the keypad. If the temperature protection is a KTY84 or other type and not using EMG terminal, set Pr.03-04=0. Then once EMG-COM is enabled, EF1 fault occurs. Or disable the EMG terminal signal. 3. Set Pr.01-37, match the HES model name to the right HES ID#.
OC fault occurs during power up	1. Verify if Pr.01-37 is set up correctly. 2. Verify if the ERR LED indicator is a red light on the PG card. 3. Verify if the grounding terminal is correctly connected to the controller. 4. Verify if any magnetic ring is installed on the motor power cable and if that magnetic ring is placed far from the controller.	1. Set Pr.00-02= 10 to reset all the parameters to the factory settings. Then set up Pr.01-37. And then power off the controller, wait for five minutes, power on the controller. 2. Remove and reinstall the encoder cable. 3. Connect the motor grounding cable to the grounding terminal on the controller. 4. Install magnetic ring correctly. If you use only one magnetic ring, wind the three wires from UVW around the core for 3 times. If you use three magnetic rings, put all three wires from UVW through three magnetic rings without winding.
Motor runs for 10 sec., PGF4 fault occurs	PG slip fault (PGF4) 1. Verify if the PG card has keeps lighting red. Verify if the grounding wire and magnetic ring of the motor are installed properly. 2. Verify if the setting at Pr.01-26 matches the encoder installed. Verify if Pr.01-30 is not set to 0. 3. Verify if the control board, terminal board	1. Verify if the wiring of the PG card and the encoder at the motor is properly installed and mounted. If it is, the malfunction may be caused by the interference. 2. Wrong PG card setting, you need to set Pr.01-26 = 3. 3. Remove and the reinstall the encoder. If the pins of the connector are damaged, reinstall a new encoder.

	and PG card pins are installed in place / if the connector is loose / if the connecting line is broken / if the pins of the connector are skewed or deformed. 4. Verify if the PG card connector is loose or poorly welded / if the encoder connector is loose / if the military grade connector is locked / if the pins are badly connected. 5. Verify if the HSP is stuck (Disconnect the power then rotate manually the motor shaft.) 6. Verify if the clearance of the shaft coupling is too large.	4. Verify if the PI gain setting (Pr.00-20 to Pr.00-25) and the Acceleration/ Deceleration setting (Pr.01-05 and Pr.01-06) are correct 5. Disconnect the power. Rotate manually to verify if the motor shaft is stuck. If it is stuck, verify if it is caused by any foreign object and remove them. If the shaft still can't rotate smoothly after removal of foreign objects, call maintenance technicians. 6. Reinstall and adjust the motor shaft coupling.
Pressure cannot be built at packing.	1. Verify if motor runs at the right direction. 2. Verify the angle of the magnetic pole. 3. Verify if anything wrong with the safety valve. Verify if the motor rotation speed is over 1000 RPM during packing.	1. Verify if the wiring of the controller matches the electrical phase sequence U-V-W. 2. Set Pr.01-01 = 0 to change the source of command to the digital keypad. Then set Pr.01-07=4 and press the RUN button to do offset angle auto-tuning. (Note that motor runs at this time.). When this auto-tuning is done, go to Pr.01-27 to verify the angle and repeat this auto-tuning 3 times to make sure that each measuring angle is ±5 degree. (The default setting of HES is 0 degree.) 3. If the rotation speed is too fast, lock the safety valve first and then verify again. If you still cannot slow down the speed, verify if there's any failure on safety valve.
Low Voltage fault (Lv)	1. Verify if there's any no-fuse breaker switch and AC reactor installed at the power input end 2. Measure if the three-phase input voltage meets the specifications 3. Verify fault record on Pr.02-10 to Pr.02-06. 4. Verify the fault status on Pr.02-32 to Pr.02-40 5. Verify the current production conditions of the machine such as production actions of the machine, pressure / flow commands)	1. If there's faults on the no-fuse breaker, on the AC reactor or insufficient capacity of AC reactor, replace it with a new one. 2. If it is caused by insufficient input voltage or phase loss, improve the input voltage. 3. If the voltage drops below the Low Voltage level instantaneously under high-speed, high-voltage and heavy-load conditions at packing pressure or melting glue, adjust the power supply capacity at the input terminal to meet the requirements of the application. 4. Verify if the DC Bus voltage recorded at the moment of the fault has really reached the fault low voltage level. Then follow the description in the step 2 above.
Slow feedback on the digital feedback	1. Verify the setting at Pr.01-31 2. Verify if there is same fault on the other buttons of the keypad.	1. For version A, set motor parameter Pr.01-31 =1. For version C, set motor parameter to 2049. Stop running the controller then you can set up the motor parameter. 2. If the fault only occurs on one button, replace with a new keypad.
Ovd Fault	1. Verify if any mistake on the wiring of the braking unit and braking resistor. 2. Verify if the barking LED light works properly when the brake activates. 3. Verify if the braking resistor works. 4. Verify if the setting value at Pr.00-32 is too small.	1. Rewire and lock properly. 2. If the braking LED lights up, it means that the MCU has sent the control command to the braking chopper, so it shows that the control signal is normal. If the resistance is still not on, it means that there's something wrong on the braking chopper. If LED doesn't light up, it means that MCU doesn't send any signal. In this case, contact Delta to replace with a new control board. 3. When the power is on, hold a non-contact digital infrared temperature gun to measure if any heat on the braking unit / resistor. Do NOT touch the braking unit / resistor with your hand to avoid heat burn and electric shock. When the power is off, also hold a non-contact digital infrared temperature gun to measure if any heat on

		the braking unit / resistor. Do NOT touch the braking unit / resistor with your hand to avoid heat burn and electric shock. If the braking unit / resistor is hot, it means that it works properly. 4. Under the right production condition, increase slowly the setting value of Pr.00-32 from 80 to a higher number. Verify also if the DC Bus temperature can be kept down efficiently.
oH3 fault occurs as soon as the controller runs	1. Verify if the wiring between KTY84 on the encoder and the controller is correct. (VJ-C: T+, T-) (VJ-A/B: AUI, ACM) 2. Remove the KTY84 from the encoder, use a multimeter to measure the resistivity between the terminals. The normal resistivity is around 600 Ohms. (Set the multimeter to the resistance measurement).	1. Rewire and lock tightly. 2. If the measurement is unusual, replace it with another set of PTC. If it runs normally at the beginning, but fails after running for some time and the motor is not overheated, switch to PTC for operation. Contact an authorized dealer or Dela for technical support.
Pressure feedback loss (PFbF fault)	1. Verify the setting at Pr.00-91 and Pr.00-92. 2. Verify if pressure feedback sensor is wiring correctly. 3. Verify if there's pressure feedback signal.	1. Set Pr.00-91= 0 and Pr.00-92=0 to disable pressure feedback detection. (For firmware v1.05 (included) and above, you can disable pressure feedback detection before running the controller.) 2. Rewire. 3. If there's no signal, switch with a new pressure feedback sensor.

5-5-2 Motor Failure

Problem	Diagnosis	Troubleshooting
The controller can be powered on normally but the motor doesn't respond.	1. Verify if the RUN button lights up. 2. Verify if the controller, motor and encoder are wired and installed correctly. 3. Test if there's output from U.V.W terminals at open-circuit.	1. Verify if the operation signal (SON-COM) is triggered and turned on. If not, troubleshoot first. If there is still no signal, set Pr.01-01=0, and press the RUN button on the keypad to verify if the RUN button lights up and if the motor runs. 2. Remove and then reinstall the controller, motor and the encoder. 3. If everything described in point 1 and 2 are fine, separate the motor power line from the controller. Then set Pr.01-00= 0 as VF control and set Pr.01-30 =0 as No function. Press the Down button on the keypad to decrease the rotation speed to 10-20 RPM. Set the multimeter to AC V function to measure if the output voltage from U.V.W terminals is normal.
During preload and packing, the servo controller rotates over 500 RPM.	1. Verify if any oil leakage around the machine. 2. Verify if any kind of leakage inside the oil pump.	1. Contact the customer to verify if the oil leakage causes RPM-overspeed on motor during packing. 2. If the over leakage inside the old pump causes RPM-overspeed on motor, switch with a new oil pump.
Motor runs backward	1. Verify if the motor UVW power lines are correctly connected to the UVW output terminals on the controller. 2. Verify if the pressure feedback signal is lower than the minimum pressure setting at Pr.00-27. 3. Verify if the hydraulic circuit is blocked or any check valve is installed.	1. Rewire. 2. Increase the minimum pressure. 3. Troubleshoot the clogged hydraulic circuit.
Motor over-heating	1. Verify if the motor cooling fan works normally. 2. Verify if there's any obstruction in the heat sink, air intake or air outlet. 3. Verify if the production settings fit frequent heavy load (high flow rate, high pressure, short cooling time on the motor).	1. Cooling fan power line is connected but still doesn't work so it's a cooling fan failure. 2. Clean the dust on the cooling fan. 3. Modify the production settings or increase the molding downtime to give more time on motor's heat dissipation. 4. If the cooling fan works normally while the motor temperature is still over the temperature protection level but the motor does not stop running, that means that the temperature protection function fails. Troubleshoot by following the instruction about fault code oH3 in Chapter 5.

5-5-3 Oil Pump Failure

Problem	Diagnosis	Troubleshooting
Oil leakage from oil pump	Use dry, clean microfiber clothes to wipe the surface of the oil pump until all hydraulic oil residue is gone. 1. Visual inspect if there is any oil leakage on the oil inlet and oil outlet flange. 2. Verify if any oil leakage on the front / end cover and the rear end cover	1. Remove and reinstall the oil inlet / oil outlet flange. If the flange is damaged, replace with a new one. 2. Contact Delta for technical support.
Large noise and strong vibration when the oil pump is running.	1. Verify if there's sufficient oil in the tank. The tank has to be at least 80% full. 2. Verify if the air causes noise in the oil circuit. 3. Verify the plastic holder between the motor and the oil pump is damaged. 4. Verify if the oil pump is running backward. 5. Verify if a check valve is installed on the oil circuit.	1. Always keep enough oil in the tank to keep air out. Because too much air in the oil pump makes noise and vibration in the oil pump, which reduces the life span of the oil pump. 2. Go to section < 3-3 Machine Adjustment Procedure > in the user manual. Follow the instruction of Step 5 (as shown below) to bleed the air out of the tank and the barrel. < Step 5. Bleed the circuit and make sure if there is any plastic material in the barrel. > 3. Power off the machine. Then replace with a new plastic holder. 4. Make sure that the oil pump is running at the right direction. 5. Make sure that the check valve is installed correctly.
The motor is running but there's no oil output at the oil outlet.	1. Verify if the motor and the oil pump coupling are connected and if the plastic holder between them is damaged. 2. Verify if the motor and the oil pump are running backward.	1. Reinstall the shaft coupling. If the plastic holder is damaged, replace it with a new one. 2. If the running direction is correct, there's something wrong with the oil pump. Replace it with a new one.
Excessive leakage in the oil pump	1. Measure the motor rotation speed under minimum pressure without installing an oil drain. (the rotation speed is below 50 RPM without installing an oil releasing pipe. 2. Measure the motor rotation speed at packing. (The rotation speed at the packing should be below 40 RPM.)	Change the source of the operation control to the digital keypad. Chang the control mode to Pr.00-09 =0 < Speed Control >. Make the motor to run at the constant speed. Measure the vibration at the constant speed. If the vibration is too large, it means that there's something wrong with the oil pump.

5-5-4 System failure and etc.

Problem	Diagnosis	Troubleshooting
Unable to set the minimum pressure	1. Verify if the RUN button lights up on the digital keypad. 2. Verify the setting at Pr.00-27 <Minimum Pressure>. 3. Verify if the motor and oil pump run normally. 4. Verify what the current speed command is on the digital keypad. 5. Verify if the oil circuit safety flood valve is loose.	1. Trigger to turn on the operation signal. 2. Increase the setting value of Pr.00-27 to a normal value. 3. If the motor and the oil pump work normally, verify if the output of the controller is normal. If the output of the controller is normal, inspect the shaft coupling and the plastic holder between the motor and the oil pump. 4. Set Pr.00-09 =1 <Pressure Control>. 5. Adjust the safety flood valve.
Motor runs normally but unable to increase the system pressure	1. Verify if the opening of the safety flood valve is too big so that oil flows back 2. Verify if there's any fault on the directional valve so that it cannot close the oil circuit. 3. Verify if there's any oil leakage around the machine. 4. Verify if the oil surface is too low in the tank. 5. Verify if the setting of the flood rate command is too low. 6. Verify pressure feedback and command.	1. Adjust the flood valve. If the same fault occurs again, replace with a new oil pump. 2. Modify the setting of the directional valve. 3. Clean the oil leakage. 4. Refill the oil to at least 80% of the tank. 5. Increase the setting value of the flow rate command. 6. If the pressure command is lower than the pressure feedback, increase the setting at the pressure command.
Machine vibrates at clamping	1. Verify the PI setting. 2. Verify if the setting value is too big at Pr.00-10 <Speed Bandwidth>. 3. Verify if there's any oil circuit leakage or the machine requires proper lubrication. 4. Measure if there's any deviation on the parallelism of the mold platen.	1. Modify the PI gain setting. For P gain, decrease the setting at Pr.00-20, Pr.00-22., Pr.00-24. For I gain, increase the setting at Pr.00-21, Pr.00-23 and Pr.00-25. 2. Decrease the speed bandwidth. 3. Solve the oil leakage problem and add enough lubrication on the machine to decrease the resistance at mold opening/closing. 4. Adjust the parallelism of the mold platen.
Machine vibrates at high speed injection forward and back, high speed carriage forward and back and melting.	1. Verify the setting values of flood rate command and pressure command. 2. Verify if the setting value of speed bandwidth (Pr.00-10) is too big. 3. Do other operations under the same settings to know if the vibration is caused by the same oil circuit. 4. The higher the flow rate command, the bigger the sound of low frequency vibration.	1. Modify the PI gain setting. For P gain, decrease the setting at Pr.00-20, Pr.00-22., Pr.00-24. For I gain, increase the setting at Pr.00-21, Pr.00-23 and Pr.00-25. 2. Decrease the speed bandwidth (Pr.00-10). 3. If the vibration is caused by a single operation, verify if there's any problem at injection oil circuit. 4. Verify if the concentricity between the motor shaft coupling and the dolly is the too big. Open the dolly, separate the oil pump from the shaft coupling. Use a dial indicator to measure and modify the concentricity.
The connecting line of the braking resistor got burned down.	1. Verify if the controller and related accessories work properly. 2. Verify if any fault occurs on the braking resistor, braking unit and the controller.	1. Power on the controller to see if it works properly. If the controller doesn't work properly, verify, one by one, the braking resistor and the braking unit. 2. Some smoke comes out and the braking resistor glowing red when the controller is powered on but not running, replace with a new braking resistor. If OV fault occurs at a sudden stop during operation or at a reverse pressure releasing, it could be a resistor failure. Remove the braking resistor and measure the resistance with a multimeter. 3.After you replace with a new braking unit and a new braking resistor, verify if the braking unit / resistor gets

		hot while the controller is powered on but not running.
Replace with a backup controller		1. Set the parameter Pr.00-02=10 <Reset to factory setting>. 2. Set Pr.01-37, see Chapter 4 Summary of the Parameter for more information. (If you cannot set up Pr.01-37, do the steps below. Step 1: Verify if the RUN button lights up on the keypad. If the controller is running, press the STOP button or remove connecting line between SON-COM. Step 2: Verify if the setting of Pr.00-00 <Controller model ID > is correct. Because the setting of Pr.01-37 <HES ID#> needs to match the setting of Pr.00-00.
Replace with a new control board		1. Save the current parameter setting of the controller. 2. Disconnect the power. Remove the old control board and install the new one. 3. Reconnect the power then verify if the model code IDs set at Pr.00-00 match the original setting in the HES. If the model code IDs don't match, contact Delta for technical support. 4. Set up Pr.01-37 <HES ID #>. 5. Input the original parameter setting of the controller automatically or manually to the new control board. 6. Control manually open molding, close molding, injection forward / backward. 7. Verify if the automatic operation runs properly.
Noise and vibration found during injection		1. Save the waveform. 2. Verify if commands and feedbacks are normal. 3. Verify if the current command reaches a stable pressure. 4. Modify the speed bandwidth (Pr.00-10). 5. Modify the slope of master command. 6. The bollards on the machines have different resistances. Lubricate the bollards to solve this problem. 7.If the same problem persists after you modified the parameters while other operations stay normal, there might be problems in the injection oil circuit. Switch with a new injection valve.
Electrical leakage on the machine	1. Verify if the grounding at the power input and the PE at the controller are installed and locked properly. 2. Verify if there's any damage on the surface of the power supply cable. 3. Measure the electrical leakage differences between before and after starting to run the controller. 4. Verify if the electrical leakage comes from the controller, motor or other accessories. 5. Verify the grounding system at the field. Measure the grounding of the controller's three-phase input. If it is a Delta grounding system, remove the RFI switch.	1. Install properly the grounding and lock tightly. 2. Replace with a new power supply cable. 3. If the power system of the controller uses Floating Ground System (IT Systems) or Asymmetric Ground System (Corner Grounded TN Systems), you need to remove the RFI switch. See section 2-1-1 Grounding Short-Circuit Plate Description (RFI Switch) for more information.
Vibration caused by packing pressure	1. The differences between internal leakage of the oil pump and the efficiency of the oil pump make this vibration.	1. Increase the setting value of the speed bandwidth (Pr.00-10). Do not set the speed bandwidth over 40 to avoid motor vibration at reverse pressure releasing or low pressure.

	2. Verify if the pressure sensor is connected. The pressure sensor and the controller need to have the same grounding then to have the same electric potential. So that the floating of the pressure feedback doesn't interfere with the pressure control. 3. Verify if the floating of the pressure control / pressure feedback signal is caused by some interference. 4. Verify if the over leakage inside the oil pump interfere with the pressure control.	2. Make the pressure sensor and the controller have the common ground. 3. Increase the < Pressure feedback filtering time > to suppress the vibration. If the setting value is too large, the pressure feedback control will be slow. 4. Switch the source of control to the digital keypad and change the control mode to <Speed control> (Pr.00-09=0). Set a fixed rotation speed. If the pressure is still too large at this speed, there might be something wrong with the oil pump. (Measure the rotation speed at packing. If the rotation speed is about 2x RPM, set the fixed rotation speed at 20 RPM to do a test. Increase slowly the pressure, if the pressure is insufficient.
Insufficient flow rate or incorrect command	1. Verify if the pressure feedback reaches the pressure command setting. 2. Verify if the motor rotation speed reaches the flow rate command. 3. Verify if the shaft coupling works properly on the oil pump. 4. Verify if the QI input of the controller follows the flow rate command from the controller.	1. When the system is under pressure control, it decreases the rotation speed when it reaches the setting of the pressure command. So, verify if the speed command and/or the pressure command fits the current production application. 2. If the motor rotation speed does not reach the setting of the speed command, verify what the setting value at Pr.00-06 is. 3. Remove and reinstall the shaft coupling. If the plastic holder is damaged, replace it with a new one. 4. Redo a three-point calibration (adjusting Pr.00-17-Pr.00-19).
The maximum injection speed doesn't meet the theoretic value.	1. Verify it the controller reaches the flow rate command. 2. Verify if the motor speed reaches setting value at Pr.00-06. 3. Verify if when the pressure feedback decelerates because of the pressure feedback after reaching the pressure command.	1. Increase the flow rate command to the maximum input (10V corresponds to the 100% of the system flow rate.). 2. Set Pr.00-06 to the Max. speed indicated on the nameplate. If this speed is still not fast enough, verify if there's any oil circuit leakage or damage. 3. Increase the pressure command.
Inaccurate pressure	1. Verify ff the setting value of the three-point calibration (Pr.00-14, Pr.00-15 and Pr.00-16 Percentage of the pressure command) follows the command. 2. Verify if there's error on the pressure feedback signal or if the strength of pressure feedback signal decreases. 3. Verify if there's error on the pressure sensor while the pressure signals are correct.	1. Redo the three-point calibration. 2. Replace with a new pressure sensor. If the strength of the pressure feedback signal decreases, replace with new wiring cables. 3. Replace with a new pressure sensor or adjust the three-point calibration to match the actual pressure sensor. Increase the speed bandwidth (Pr.00-10). Modify the PI Gain by increasing Pr.00-20, Pr.00-22, Pr.00-24 and by decreasing Pr.00-21, Pr.00-23, Pr,01-25.
OC fault occurs while getting ready for injection at high pressure mold locking.	1. After the high-pressure mold locking is over, verify if the motor still receives the injection command while releasing the pressure reversely. If the motor still receives commands now, the motor starts abruptly to run forward and output excessive current.	1. Add a 0.2-second mold locking delay time to the master controlling process. 2. If you are not able to add a 0.2-second delay time, adjust the limit of current (Pr.02-41).
Insufficient weight in short shots in some finished products.	1. Verify which segment goes wrong, the injection segment or the melting segment. 2. Verify if the production parameters at the injection segment follows the commands. 3. Verify if the motor deceleration caused by the pressure limit. 4. Verify if there's any unusual vibration of the pressure or the flow rate at melting segment. 5. Verify if there's any position deviation at melting segment.	1. Find out what conditions are which make the influence factors. Then measure the production settings at this segment. 2. Pressure and flow input command don't match the production settings. Verify if the commands from the master are correct or if the commands are interfered. 3. Increase the pressure command 4. Verify if the re-grind resin is being used in the production. Verify also if the density difference between the melting plastic materials is caused by the moisture during drying. 5. Verify if each melting position is within the range.

Chapter 6 Suggestions and Error Corrections for Hybrid Servo Drives

6-1 Maintenance and Inspections

6-2 Greasy Dirt Problem

6-3 Fiber Dust Problem

6-4 Erosion Problem

6-5 Industrial Dust Problem

6-6 Wiring and Installation Problem

6-7 Multi-function Input/Output Terminals Problem

6-8 Maintenance of Coupling

The hybrid servo drive has a comprehensive fault diagnostic system that includes several different alarms and fault messages. Once a fault is detected, the corresponding protective functions will be activated. The following faults are displayed as shown on the hybrid servo drive digital keypad. The last six faults can be displayed on the digital keypad.

The hybrid servo drive is made up by numerous components, such as electronic components, including IC, resistor, capacity, transistor, and cooling fan, relay, etc. These components can't be used permanently. They have limited-life even under normal operation. Preventive maintenance is required to operate this hybrid servo drive in its optimal condition, and to ensure a long life.

Check your hybrid servo drive regularly to ensure there are no abnormalities during operation and follows the precautions:

CAUTION	☑ Wait 5 seconds after a fault has been cleared before performing reset via keypad of input terminal. ☑ When the power is off after 5 minutes for ≦ 22kW models and 10 minutes for ≧ 30kW models, please confirm that the capacitors have fully discharged by measuring the voltage between + and -. The voltage between + and - should be less than $25V_{DC}$. ☑ Only qualified personnel can install, wire and maintain drives. Please take off any metal objects, such as watches and rings, before operation. And only insulated tools are allowed. ☑ Never reassemble internal components or wiring. ☑ Make sure that installation environment comply with regulations without abnormal noise, vibration and smell.

6-1 Maintenance and Inspections

Before the check-up, always turn off the AC input power and remove the cover. Wait at least 10 minutes after all display lamps have gone out, and then confirm that the capacitors have fully discharged by measuring the voltage between DC+ and DC-. The voltage between DC+ and DC-should be less than $25V_{DC}$.

Ambient environment

Check Items	Methods and Criterion	Maintenance Period		
		Daily	Half Year	One Year
Check the ambient temperature, humidity, vibration and see if there are any dust, gas, oil or water drops	Visual inspection and measurement with equipment with standard specification	○		
If there are any dangerous objects	Visual inspection	○		

Voltage

Check Items	Methods and Criterion	Maintenance Period		
		Daily	Half Year	One Year
Check if the voltage of main circuit and control circuit is correct	Measure with multimeter with standard specification	○		

Digital Keypad Display

Check Items	Methods and Criterion	Maintenance Period		
		Daily	Half Year	One Year
Is the display clear for reading	Visual inspection	○		
Any missing characters	Visual inspection	○		

Mechanical parts

Check Items	Methods and Criterion	Maintenance Period		
		Daily	Half Year	One Year
If there is any abnormal sound or vibration	Visual and aural inspection		○	
If there are any loose screws	Tighten the screws		○	
If any part is deformed or damaged	Visual inspection		○	
If there is any color change by overheating	Visual inspection		○	
If there is any dust or dirt	Visual inspection		○	
If plastic between couplings are damaged	Visual inspection			○

Main circuit

Check Items	Methods and Criterion	Maintenance Period		
		Daily	Half Year	One Year
If there are any loose or missing screws	Tighten or replace the screw	○		
If machine or insulator is deformed, cracked, damaged or with color change due to overheating or ageing	Visual inspection **NOTE: Please ignore the color change of copper plate**		○	
If there is any dust or dirt	Visual inspection		○	

Terminals and wiring of main circuit

Check Items	Methods and Criterion	Maintenance Period		
		Daily	Half Year	One Year
If the terminal or the plate is color change or deformation due to overheat	Visual inspection		○	
If the insulator of wiring is damaged or color change	Visual inspection		○	
If there is any damage	Visual inspection	○		

DC capacity of main circuit

Check Items	Methods and Criterion	Maintenance Period		
		Daily	Half Year	One Year
If there is any leak of liquid, color change, crack or deformation	Visual inspection	○		
If the safety valve is not removed? If valve is inflated?	Visual inspection	○		
Measure static capacity when required		○		

Resistor of main circuit

Check Items	Methods and Criterion	Maintenance Period		
		Daily	Half Year	One Year
If there is any peculiar smell or insulator cracks due to overheat	Visual inspection, smell	○		
If there is any disconnection	Visual inspection	○		
If connection is damaged?	Measure with multimeter with standard specification	○		

Transformer and reactor of main circuit

Check Items	Methods and Criterion	Maintenance Period		
		Daily	Half Year	One Year
If there is any abnormal vibration or peculiar smell	Visual, aural inspection and smell	○		

Magnetic contactor and relay of main circuit

Check Items	Methods and Criterion	Maintenance Period		
		Daily	Half Year	One Year
If there are any loose screws	Visual and aural inspection	○		
If the contact works correctly	Visual inspection	○		

Printed circuit board and connector of main circuit

Check Items	Methods and Criterion	Maintenance Period		
		Daily	Half Year	One Year
If there are any loose screws and connectors	Tighten the screws and press the connectors firmly in place.		○	
If there is any peculiar smell and color change	Visual and smell inspection		○	
If there is any crack, damage, deformation or corrosion	Visual inspection		○	
If there is any liquid is leaked or deformation in capacity	Visual inspection		○	

Cooling fan of cooling system

Check Items	Methods and Criterion	Maintenance Period		
		Daily	Half Year	One Year
If there is any abnormal sound or vibration	Visual, aural inspection and turn the fan with hand (turn off the power before operation) to see if it rotates smoothly		○	
If there is any loose screw	Tighten the screw		○	
If there is any color change due to overheat	Change fan		○	

Ventilation channel of cooling system

Check Items	Methods and Criterion	Maintenance Period		
		Daily	Half Year	One Year
If there is any obstruction in the heat sink, air intake or air outlet	Visual inspection		○	

NOTE

Use the neutral cloth for cleaning and use dust cleaner to remove dust when necessary.

6-2 Greasy Dirt Problem

Serious greasy dirt problems generally occur in processing industries such as machine tools, punching machines and so on. Please be aware of the possible damages that greasy oil may cause to your drive:

1. Electronic components that silt up with greasy oil may cause the drive to burn out or even explode.
2. Most greasy dirt contains corrosive substances that may damage the drive.

Solution:

Install the hybrid servo drive in a standard cabinet to keep it away from dirt. Clean and remove greasy dirt regularly to prevent damage of the drive.

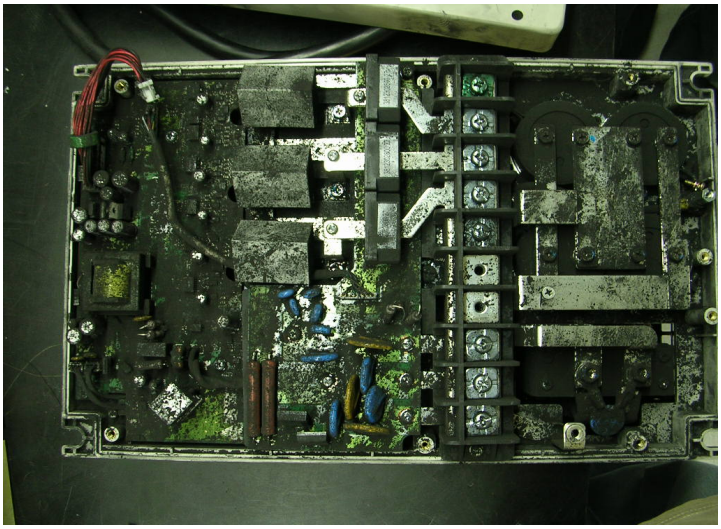

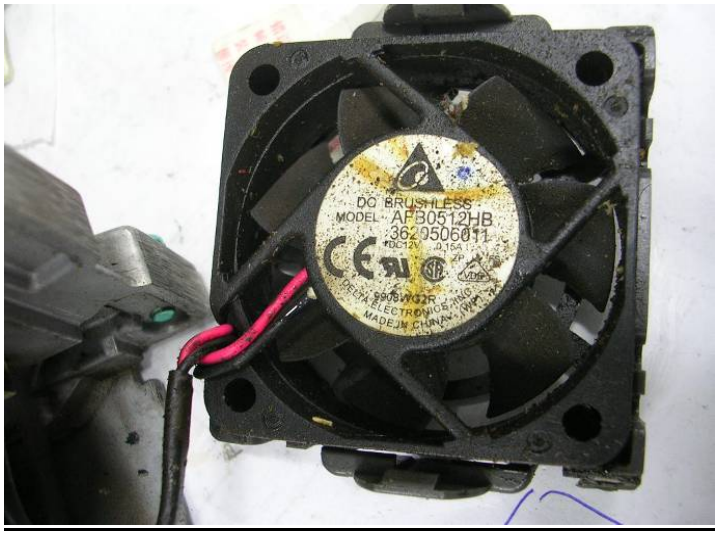

6-3 Fiber Dust Problem

Serious fiber dust problems generally occur in the textile industry. Please be aware of the possible damages that fiber may cause to your drives:

1. Fiber that accumulates or adheres to the fans will lead to poor ventilation and cause overheating problems.
2. Plant environments in the textile industry have higher degrees of humidity that may cause the drive to burn out, become damaged or explode due to wet fiber dust adhering to the devices.

Solution:

Install the hybrid servo drive in a standard cabinet to keep it away from fiber dust. Clean and remove fiber dust regularly to prevent damage to the drive.

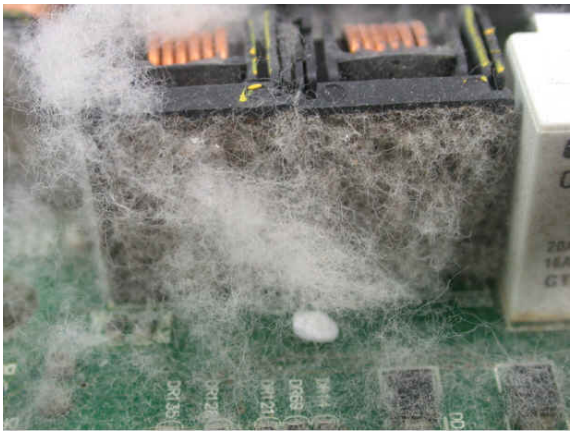

6-4 Erosion Problem

Erosion problems may occur if any fluids flow into the drives. Please be aware of the damages that erosion may cause to your drive.

1. Erosion of internal components may cause the drive to malfunction and possibility to explode.

Solution:

Install the hybrid servo drive in a standard cabinet to keep it away from fluids. Clean the drive regularly to prevent erosion.

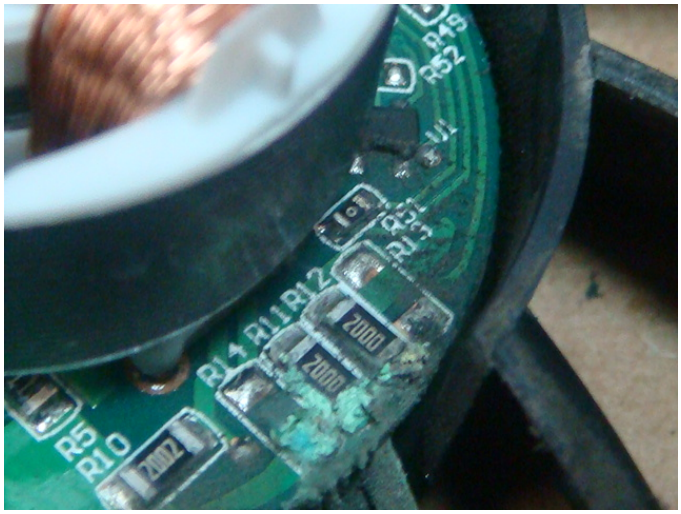

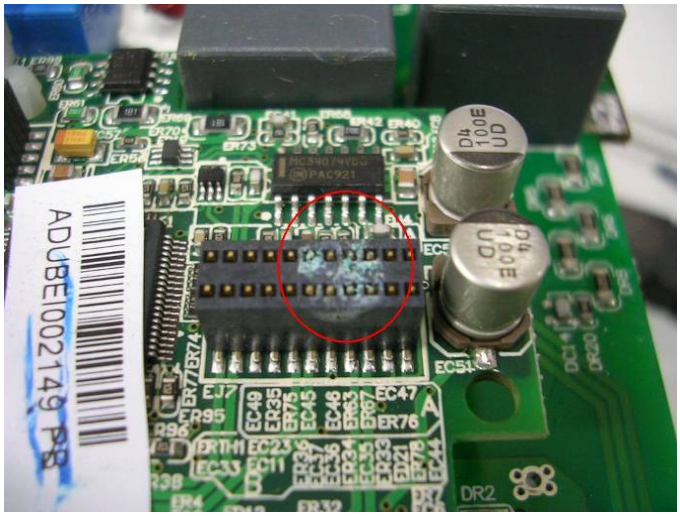

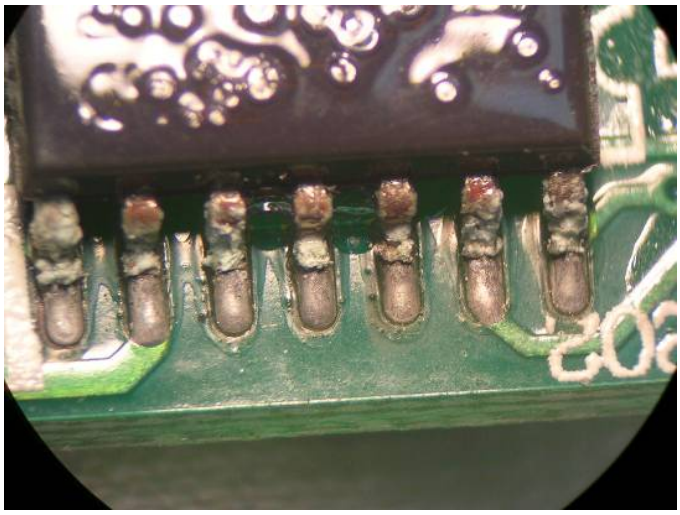

6-5 Industrial Dust Problem

Serious industrial dust pollution frequently occurs in stone processing plants, flour mills, cement plants, and so on. Please be aware of the possible damage that industrial dust may cause to your drives:

1. Dust accumulating on electronic components may cause overheating problem and shorten the service life of the drive.
2. Conductive dust may damage the circuit board and may even cause the drive to explode.

Solution:

Install the hybrid servo drive in a standard cabinet and cover the drive with a dust cover. Clean the cabinet and ventilation hole regularly for good ventilation.

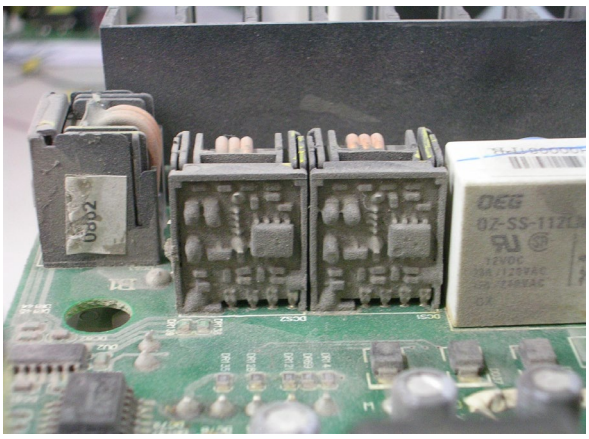

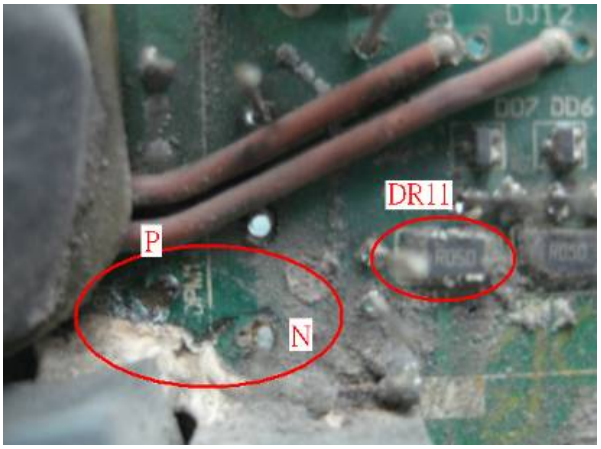

Check Items	Methods and Criterion	Troubleshooting
Visual check on the overall appearance	● Any accumulation of dirt and dust?	1. Shut down the servo drive, wait for a certain time. Make sure that the power indicator is off before you go to the next step. (≤ 22kW: wait for 5 min after shut down; ≥ 30kW: wait for 10 min after shut down) 2. Turn on a vacuum cleaner to remove the dust.
Ventilation Channel	● Any obstruction in the heat sink, air intake or air outlet? ● Any accumulation of dust on the cooling fan? ● Is the cooling fan damaged?	1. Shut down the servo drive, wait for a certain time. Make sure that the power indicator is off before you go to the next step. (≤ 22kW: wait for 5 min after shut down; ≥ 30kW: wait for 10 min after shut down) 2. Follow the instruction in this manual to remove and clean the cooling fan. 3. Turn on a vacuum cleaner to clean the dust in the heat sink. ◦ ● If the cooling fan doesn't run at all, replace it with a new one. ● Clean the ventilation channel periodically to avoid accumulation of dirt and dust.

● Install and Remove Cooling Fans

Frame-C & Frame-D	
● Use a philillips-head screw driver to loose the two screws on the two sides of the cooling fan. ● Press the latch to disconnect the fan power. Pay attention to the direction of the latch during installation. Then remove the fan cover. 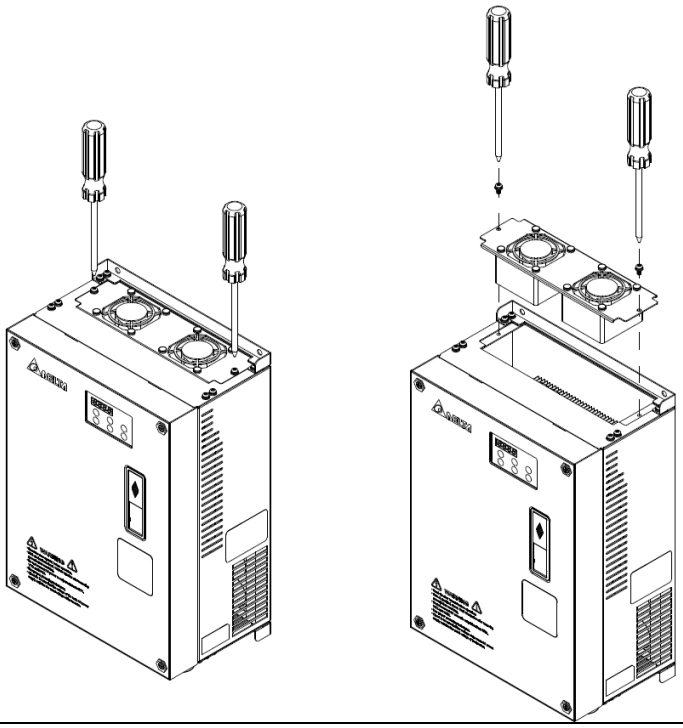	● Press the 4 latches on the fan cover, then you can remove the fan. Note that you don't need to pull up completely the latches to remove the fans. Just press gently. 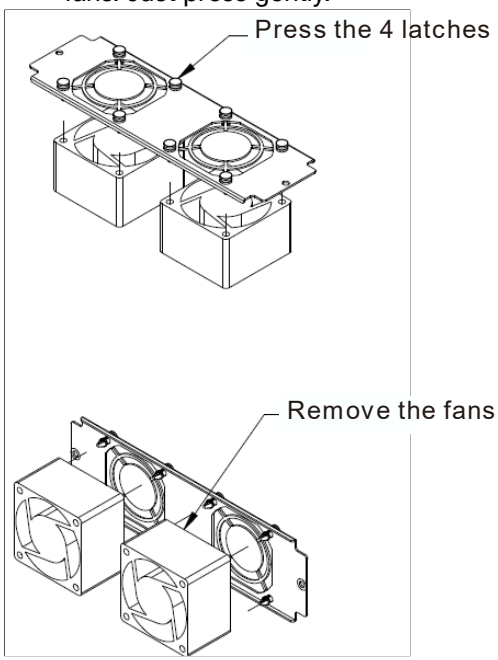
● Have the labels on the cooling fans facing outside of the servo drive when installing the cooling fans. Screw torque force: 10~12kgf-cm(8.7~10.4lb-in)	

Frame-E	
● Use a philillips-head screw driver to loose the 4 screws on the two sides of the cooling fan. ● Press the latch to disconnect the fan power. Pay attention to the direction of the latch during installation. Then remove the fan cover. 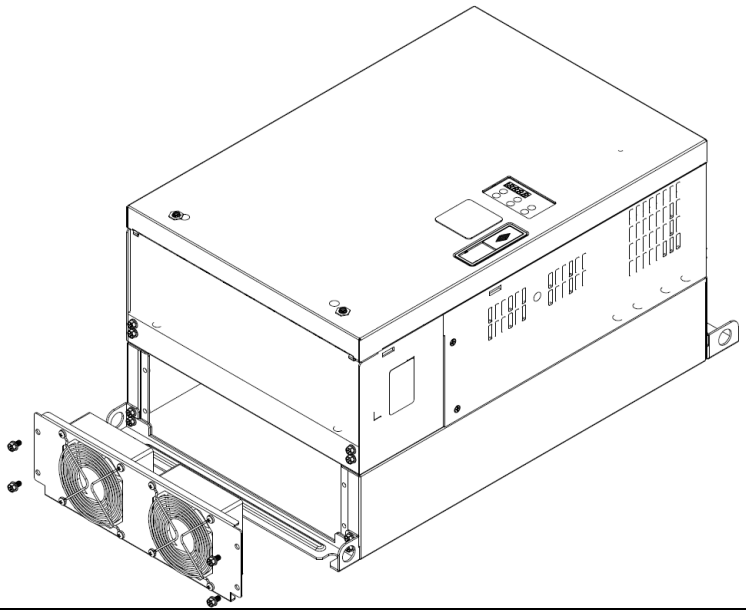	● Loosen the 4 screws around each fan (8 screws in total), then remove the protective cover and the fan. 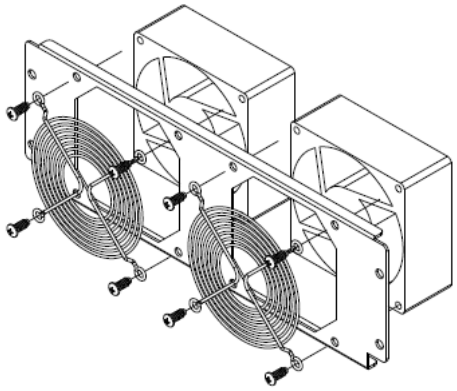
● Have the labels on the cooling fans facing inside of the servo drive when installing the cooling fans. Screw torque force: 10~12kgf-cm (8.7~10.4lb-in)	

NOTE

- Do follow the fan installing/ removing instructions in this manual. Make sure the air outlet is facing the right direction. If air outlet is facing the wrong direction, the servo drive might be damaged.
- You can see arrow symbols indicating the air blowing direction on the side of the cooling fans.

6-6 Wiring and Installation Problem

When wiring the drive, the most common problem is wrong wire installation or poor wiring. Please be aware of the possible damages that poor wiring may cause to your drives:

1. Screws are not fully fastened. Occurrence of sparks as impedance increases.
2. If a customer has opened the drive and modified the internal circuit board, the internal components may have been damaged.

Solution:

Ensure all screws are fastened when installing the hybrid servo drive. If the hybrid servo drive functions abnormally, send it back to the repair station. Do NOT try to reassemble the internal components or wire.

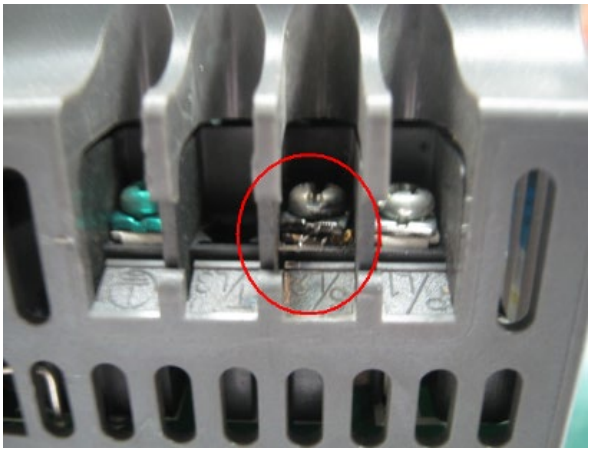

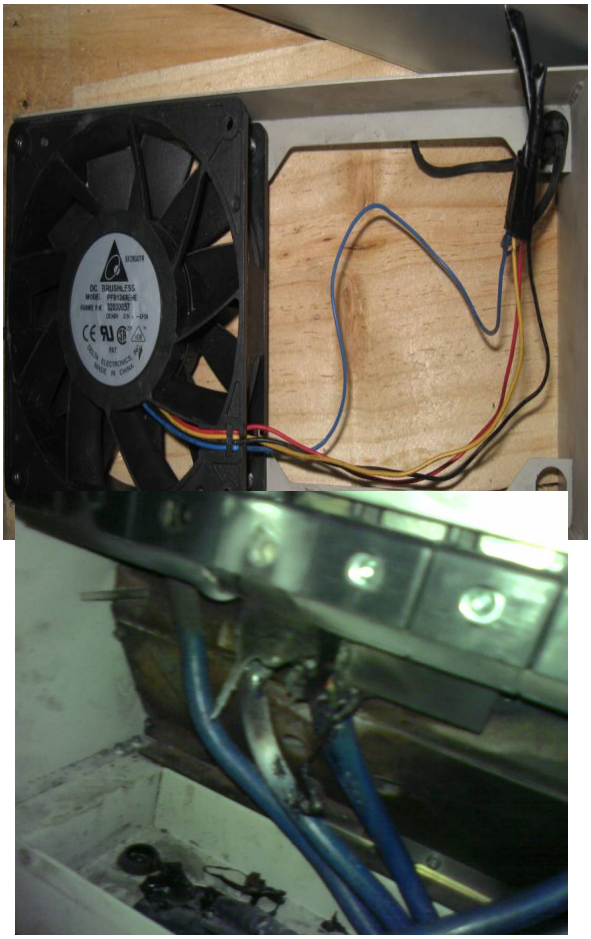

6-7 Multi-function Input/Output Terminals Problem

Multi-function input/output terminal errors are generally caused by over usage of terminals and not following specifications. Please be aware of the possible damages that errors on multi-function input/output terminals may cause to your drives:

1. Input/output circuit may burns out when the terminal usage exceeds its limit.

Solution:

Refer to the user manual for multi-function input output terminals usage and follow the specified voltage and current. DO NOT exceed the specification limits.

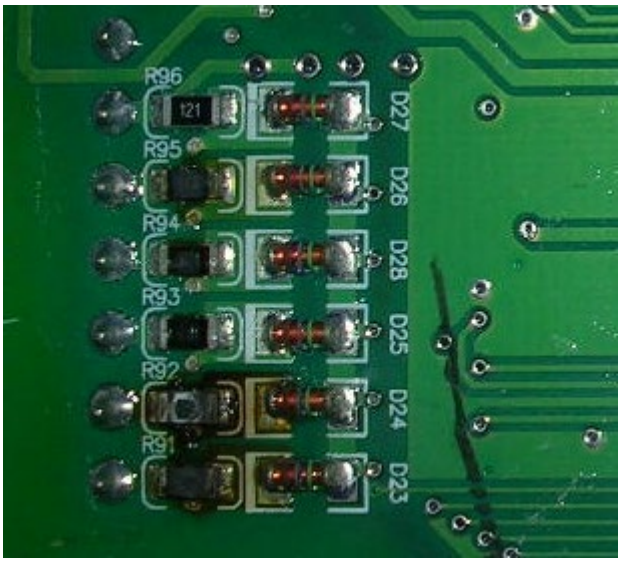

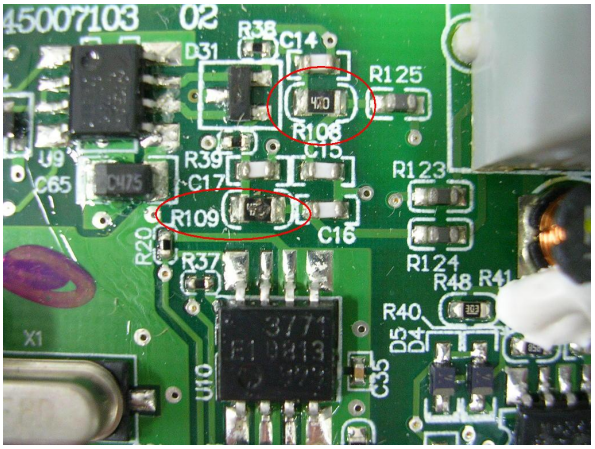

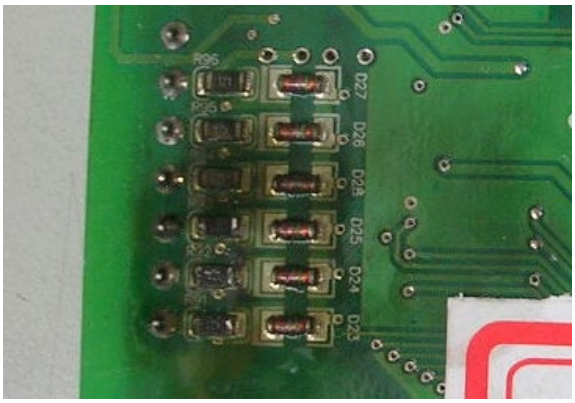

6-8 Maintenance of Coupling

It is recommended that you visually check the condition of the coupling at least once a year, and pay special attention to the condition of the wye junction on the couplings.

Since the passive bearing and the active bearing of the mechanical bearings goes up and down while the hybrid servo drive runs, verify if the couplings are aligned and realign the couplings if necessary.

Verify the parts of the couplings periodically such as if the metal parts on both sides and the middle plastic sleeve are deformed or damaged. Also visually verify if the screws are loose.

Appendix A: Optional Accessories

A-1 Braking Resistor

A-2 Non-fuse Circuit Breaker

A-3 Fuse

A-4 Reactor

A-5 Digital Keypad KPV-CC01

A-6 EMI Filter

A-7 Speed Feedback Encoder

A-8 Wall-Mounted Installation

CAUTION

- ☑ This hybrid servo drive has gone through rigorous quality control tests at the factory before shipment. If the package is damaged during shipping, please contact your dealer.
- ☑ The accessories produced by Delta are only for using with Delta hybrid servo drive. Do NOT use with other drive to prevent damage.

A-1 Braking Resistor

VJ-A 230V models:

Applicable Motor	125% Braking Torque 10%ED *1						Maximum Braking Torque		
Model	Braking Torque (kg-m)	Braking Unit VFDB＊3	Braking Resistor Models *2		Effective Braking Resistance of Each Drive	Total Braking Current (A)	Min. Braking Resistance(Ω)	Maximum Total Braking Current (A)	Max. Peak Power (KW)
VFD110VL23A-J	7.4	-	BR1K5W013*1		1500W13Ω	29	9.5	40.0	15.2
VFD150VL23A-J	10.2	-	BR1K0W4P3*2	2 in serial	2000W8.6Ω	44	8.3	46.0	17.5
VFD185VL23A-J	12.2	-	BR1K2W3P9*2	2 in serial	2400W7.8Ω	49	5.8	66.0	25.1
VFD220VL23A-J	14.9	-	BR1K5W3P3*2	2 in serial	3000W6.6Ω	58	5.8	66.0	25.1

*1 Calculation for 125% brake toque: (kW)*125%*0.8; where 0.8 is motor efficiency.

Because there is a resistor limit of power consumption, the longest operation time for 10% ED is 10sec (on: 10sec/ off: 90sec).

*2 For heat dissipation, a resistor of 400W or lower should be fixed to the frame and maintain the surface temperature below 250ºC; a resistor of 1000W and above should maintain the surface temperature below 350ºC.

*3 See user guides of braking units for more information.

VJ-C Air Cooled 230V and 460V models:

Applicable Motor			125% Braking Torque 10%ED *1					Maximum Braking Torque		
HP	kW	Model	Braking Resistor Models *2	Quantity	Parallel or Serial Connection	Effective Braking Resistance of Each Drive	Total Braking Current (A)	Min. Braking Resistance	Maximum Total Braking Current (A)	Max. Peak Power (KW)
40	30.0	VFD300VL23C-J	BR1K0W5P1	4	2 in parallel, 2 In serial*3	4000W 5.1Ω	75	4.8	80	30.4
50	37.0	VFD370VL23C-J	BR1K2W3P9	4	2 in parallel, 2 In serial	4800W 3.9Ω	97	3.2	120	45.6
15	11.0	VFD110VL43C-J	BR1K5W043	1		1500W 43Ω	17.6	30.8	24.7	18.8
20	15.0	VFD150VL43C-J	BR1K0W016	2	2 in serial	2000W 32Ω	24	25.0	30.4	23.1
25	18.5	VFD185VL43C-J	BR1K5W013	2	2 in serial	3000W 26Ω	29	20.8	36.5	27.7
30	22.0	VFD220VL43C-J	BR1K5W013	2	2 in serial	3000W 26Ω	29	19.0	40	30.4
40	30.0	VFD300VL43A-J, VFD300VL43C-J	BR1K0W5P1	4	4 in serial	4000W 20.4Ω	37	19.0	40	30.4

50	37.0	VFD370VL43A-J, VFD370VL43C-J	BR1K2W015	4	2 in parallel, 2 in serial	4800W 15Ω	50	14.0	54	40.8
60	45.0	VFD450VL43A-J, VFD450VL43C-J	BR1K5W013	4	2 in parallel, 2 in serial	6000W 13Ω	59	12.7	60	45.7
75	55.0	VFD550VL43A-J, VFD550VL43C-J	BR1K0W5P1	8	2 in parallel, 4 in serial *4	8000W 10.2Ω	76	9.5	80	60.8
100	75.0	VFD750VL43A-J, VFD750VL43C-J	BR1K2W015	8	4 in parallel, 2 in serial *5	9600W 7.5Ω	100	6.3	120	90.7

*1 Calculation for 125% brake toque: (kW)*125%*0.8; where 0.8 is motor efficiency.
Because there is a resistor limit of power consumption, the longest operation time for 10% ED is 10sec (on: 10sec/ off: 90sec).

*2 For heat dissipation, a resistor of 400W or lower should be fixed to the frame and maintain the surface temperature below 250ºC; a resistor of 1000W and above should maintain the surface temperature below 350ºC.

*3 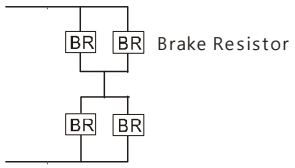 2 in parallel connection, 2 in serial connection.	*4 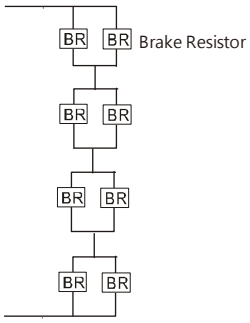 2 in parallel connection, 4 in serial connection	*5 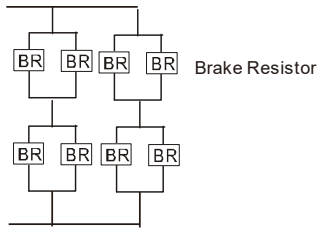 4 in parallel connection, 2 in serial connection.

NOTE

1. Definition for Brake Usage ED%:
   Explanation: The definition of the brake usage ED (%) is for assurance of enough time for the brake unit and brake resistor to dissipate away heat generated by braking. When the brake resistor heats up, the resistance would increase with temperature, and brake torque would decrease accordingly. Recommended cycle time is one minute.

   Definition of Brake Usage ED%

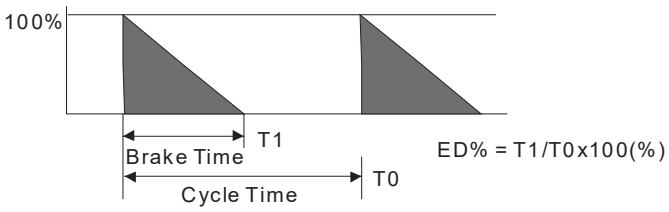

For safety concern, install an overload relay (O.L.) between the brake unit and the brake resistor in conjunction with the magnetic contactor (MC) prior to the drive for abnormal protection. The purpose of installing the thermal overload relay is to protect the brake resistor from damage due to frequent brake, or due to brake unit keeping operating resulted from unusual high input voltage. Under such circumstance, just turn off the power to prevent damaging the brake resistor.

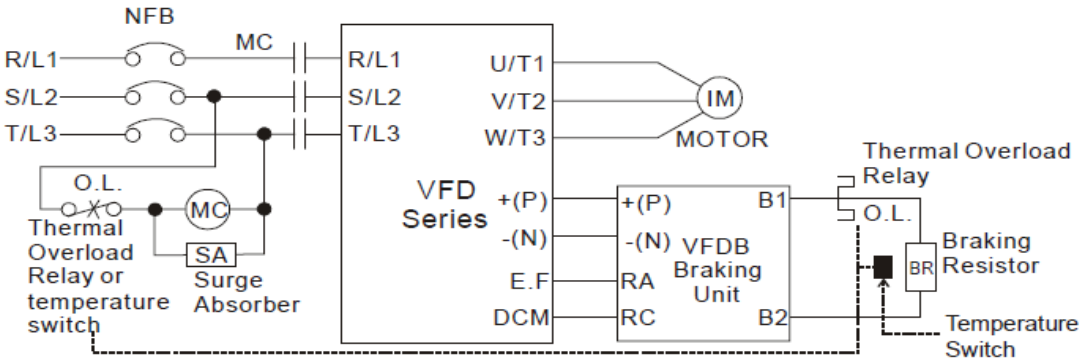

Note1: When using the AC drive with DC reactor, please refer to wiring diagram in the AC drive user manual for the wiring of terminal +(P) of Braking unit.

Note2: **Do NOT** wire terminal -(N) to the neutral point of power system.

2. If damage to the drive or other equipment is due to the fact that the brake resistors and brake modules in use are not provided by Delta, the warranty will be void.
3. Take into consideration the safety of the environment when installing the brake resistors. If the minimum resistance value is to be utilized, consult local dealers for the calculation of Watt figures.
4. When using more than 2 brake units, equivalent resistor value of parallel brake unit cannot be less than the value in the column “Minimum Equivalent Resistor Value for Each Hybrid Servo Drive” (the right-most column in the table). Please read the wiring information in the user manual of brake unit thoroughly prior to operation.
5. This chart is for normal usage; if the hybrid servo drive is applied for frequent braking, it is suggested to enlarge 2~3 times of the Watts.
6. The position to install brake units needs to be at least 15cm away from the hybrid servo drive.

7. Appearance and specification of brake resistors

7.1Wirewound resistor: for 1000W (included) and above. Refer to the following image for its appearance. See table below for specification comparison.

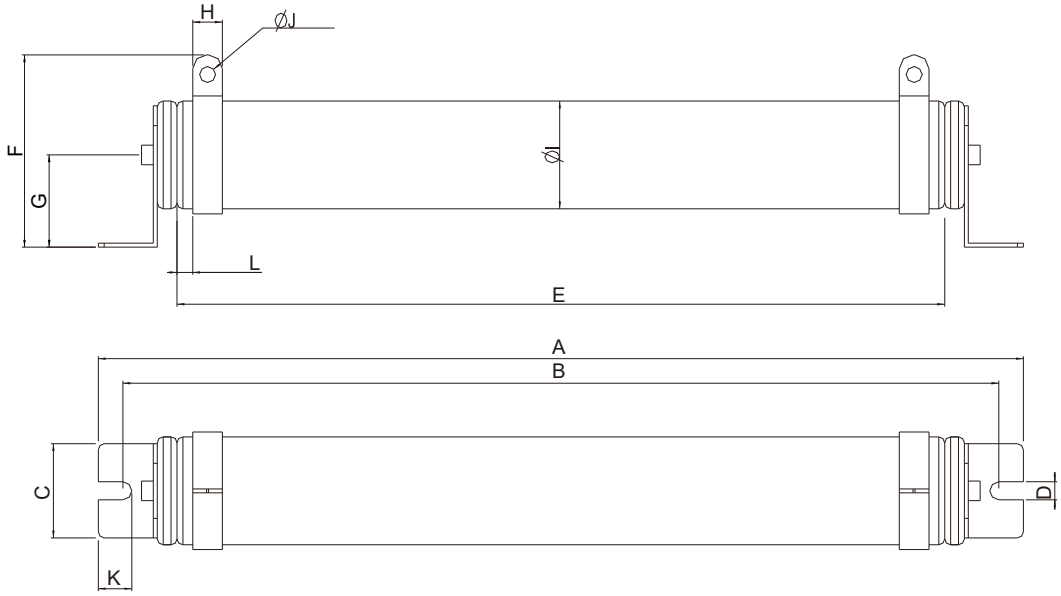

7.2 Brake Resistors' model name and comparison

Unit: mm

Model	A	B	C	D	E	F	G	H	ØI	ØJ	K	L
BR1K0W5P1	470 ± 10	445 ± 5	48 ± 0.2	9.1 ± 0.1	390 ± 3	98 ± 5	47 ± 5	15 ± 1	55 ± 5	8.1 ± 0.1	21 ± 0.2	8 ± 1
BR1K2W015												
BR1K5W013												

7.3 Aluminum housed resistor: for below 1000W.Refer to the following image for its appearance. See table below for specification comparison.

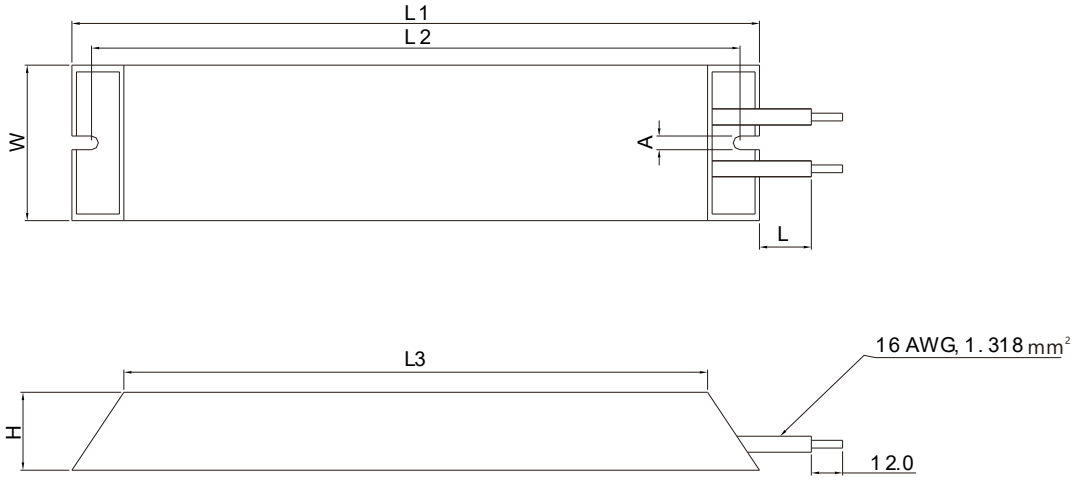

7.4 Brake Resistors' model name and comparison

Unit: mm

Model	L1	L2	L3	W	H	A	L
BR080W200	140 ± 2	125 ± 2	100 ± 1	40 ± 0.5	20 ± 0.5	5.3 ± 0,5	200 ± 20
BR080W750							
BR200W091	165 ± 2	150 ± 2	125 ± 1	60 ± 0.5	30 ± 0.5		
BR200W360							
BR300W070	215 ± 2	200 ± 2	175 ± 1				
BR300W250							
BR400W040	265 ± 2	250 ± 2	225 ± 1				
BR400W150							

A-2 Non-Fuse Circuit Breaker

VJ-C series:

Comply with the UL standard: Per UL 508, paragraph 45.8.4, part a,

The rated current of the breaker shall be 2 - 4 times of the maximum rated input current of hybrid servo drive.

Air Cooled:

Model	Recommended Current (A)
VFD300VL23C-J	250
VFD370VL23C-J	300
VFD110VL43C-J	50
VFD150VL43C-J	60
VFD185VL43C-J	80
VFD220VL43C-J	100
VFD300VL43A-J, VFD300VL43C-J	125
VFD370VL43A-J, VFD370VL43C-J	150
VFD450VL43A-J, VFD450VL43C-J	200
VFD550VL43A-J, VFD550VL43C-J	225
VFD750VL43A-J, VFD750VL43C-J	300

A-3 Fuse

- ☑ Fuse specifications smaller than the table below are allowed.
- ☑ For installation in the United States, branch circuit protection must be provided in accordance with the National Electrical Code (NEC) and any applicable local codes. Use UL classified fuses to fulfill this requirement.
- ☑ For installation in Canada, branch circuit protection must be provided in accordance with Canadian Electrical Code and any applicable provincial codes. Use UL classified fuses to fulfill this requirement.

Air Cooled

230V model	Input Current (A)	Line Fuse	
		Input Current (A)	Bussmann P/N
VFD300VL23C-J	120	250	JJS-250
VFD370VL23C-J	146	300	JJS-300

Air Cooled:

460V model	Input Current (A)	Line Fuse	
		Input (A)	Bussmann P/N
VFD110VL43C-J	24	50	JJS-50
VFD150VL43C-J	30	60	JJS-60
VFD185VL43C-J	37	80	JJS-80
VFD220VL43C-J	47	100	JJS-100
VFD300VL43A-J, VFD300VL43C-J	60	125	JJS-125
VFD370VL43A-J, VFD370VL43C-J	73	150	JJS-150
VFD450VL43A-J, VFD450VL43C-J	91	200	JJS-200
VFD550VL43A-J, VFD550VL43C-J	110	225	JJS-225
VDF750VL43A-J, VFD750VL43C-J	150	300	JJS-300

A-4 Reactor

Installing an AC reactor on the input side of a hybrid servo drive can increase line impedance, improve the power factor, reduce input current, and reduce interference generated from the hybrid servo drive. It also reduces momentary voltage surges or abnormal current spikes. For example, when the main power capacity is higher than 500 kVA, or when using a switching capacitor bank, momentary voltage and current spikes may damage the hybrid servo drive's internal circuit. An AC reactor on the input side of the hybrid servo drive protects it by suppressing surges.
Installation:

As shown in the image below, an AC input reactor is installed between the mains power inputs and the R S T input terminals on the hybrid servo drive.

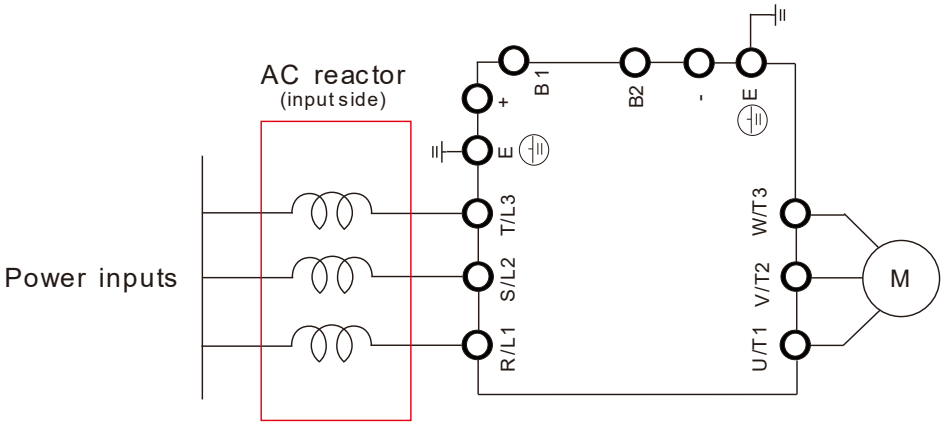

Connecting an AC input reactor

A-4-1 AC Reactor

Specifications: AC Input Reactor

Air Cooled

200V~230V/ 50~60Hz model of VFDXXXVL23C-J series AC Input Reactor							
Model	KW	HP	Rated Current (Arms)	Saturation Current (Arms)	3% Reactor (mH)	5% Reactor (mH)	3% Input Reactor: Delta Part #
300	30	40	120	240	0.12	0.2	DR105AP106
370	37	50	146	292	0.087	0.145	DR146AP087

380V~460V/ 50~60Hz model of VFDXXXVL43A-J, VFDXXXVL43C-J series AC Input Reactor							
Model	KW	HP	Rated Current (Arms)	Saturation Current (Arms)	3% Reactor (mH)	5% Reactor (mH)	3% Input Reactor: Delta Part#
110	11	15	21	42	1.01	1.683	DR024AP881
150	15	20	27	54	0.76	1.267	DR032AP660
185	18.5	25	34	68	0.639	1.066	DR038AP639
220	22	30	41	82	0.541	0.9	DR045AP541
300	30	40	60	120	0.405	0.675	DR060AP405
370	37	50	73	146	0.334	0.555	DR073AP334
450	45	60	91	182	0.267	0.445	DR091AP267
550	55	75	110	220	0.221	0.368	DR110AP221
750	75	100	150	300	0.162	0.27	DR150AP162

Specifications: AC Output Reactor

230V, 50/60Hz, Three-Phase

kW	HP	Rated Current of Reactor	Maximum Continuous Current	Inductance (mH)	
				3% Impedance	5% Impedance
30	40	130	195	0.1	0.2
37	50	160	240	0.075	0.15

460V, 50/60Hz, Three-Phase

kW	HP	Rated Current of Reactor	Maximum Continuous Current	Inductance (mH)	
				3% Impedance	5% Impedance
15	20	35	52.5	0.8	1.2
18.5	25	45	67.5	0.7	1.2
22	30	45	67.5	0.7	1.2
30	40	80	120	0.4	0.7
37	50	80	120	0.4	0.7
45	60	100	150	0.3	0.45
55	75	130	195	0.2	0.3
75	100	160	240	0.15	0.23

Application of AC Reactor

Connected in input circuit

Application 1

When more than one hybrid drive is connected to the same mains power and one of them is ON during operation.

Problem: When applying power to one of the hybrid drive, the charge current of the capacitors may cause voltage dip. The hybrid drive may be damaged when over current occurs during operation.

Correct wiring:

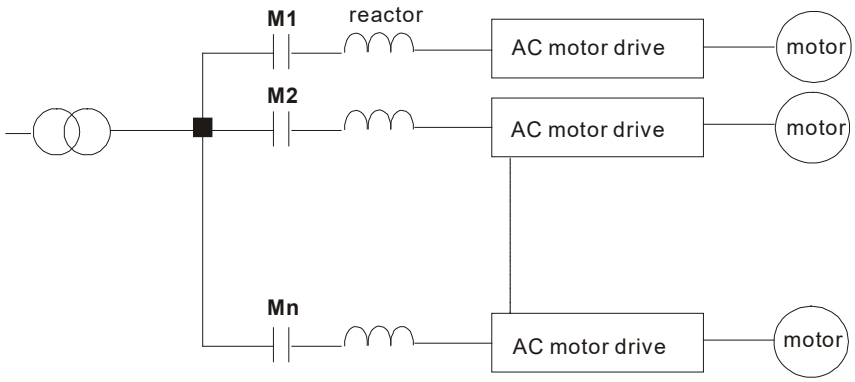

Application 2

Silicon rectifier and hybrid drive are connected to the same power.

Problem: Switching spikes will be generated when the silicon rectifier switches ON/OFF. These spikes may damage the mains circuit.

Correct wiring:

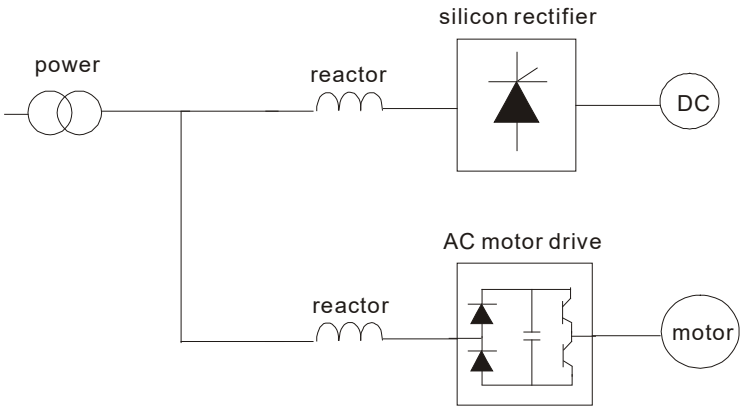

Application 3

When the power supply capacity exceeds 10 times of the inverter capacity.

Problem: When the mains power capacity is too large, line impedance will be small and the charge current will be too high. This may damage hybrid drive due to higher rectifier temperature.

Correct wiring

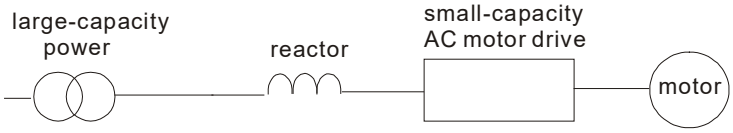

A-4-2 Zero Phase Reactor

RF220X00A

Unit: mm (inch)

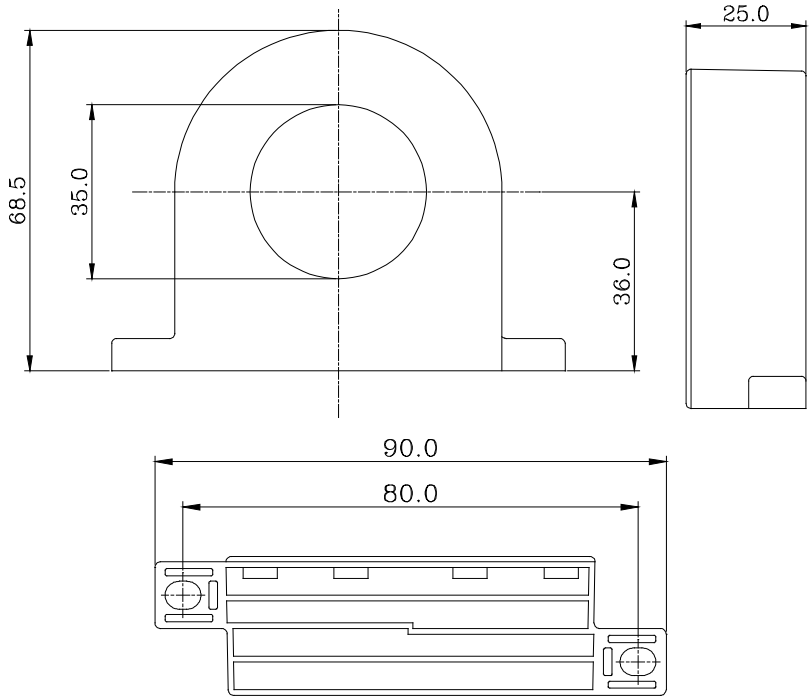

Cable type (Note)	Recommended Wire Size (mm^2)			Qty.	Wiring Method
	AWG	mm^2	Nominal (mm^2)		
Single-core	≤10	≤5.3	≤5.5	1	Figure A
	≤2	≤33.6	≤38	3	Figure B
Three-core	≤12	≤3.3	≤3.5	1	Figure A
	≤1	≤42.4	≤50	3	Figure B

NOTE

600V insulated power line.

1. The table above gives approximate wire size for the zero phase reactors but the selection is ultimately governed by the type and diameter of cable fitted i.e. the cable must fit through the center hole of zero phase reactors.
2. Only the phase conductors should pass through, not the earth core or screen.
3. When long motor output cables are used an output zero phase reactor may be required to reduce radiated emissions from the cable.

Figure A

Please wind each wire 4 times around the core. The reactor must be placed at inverter output as close as possible.

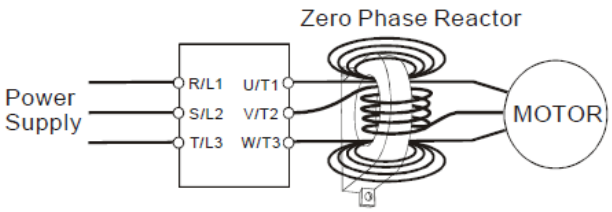

Figure B

Please put all wires through 4 cores in series without winding.

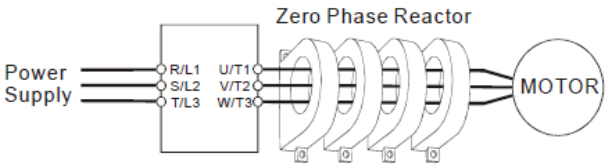

A-5 Digital Keypad KPC-CC01

The VFD-VJ series products use the digital keypad KPC-CC01 as the display unit. For the actual keypad appearance, please refer to the actual product. This picture shows the schematic diagram for illustrative purposes only.

KPC-CC01 Digital Keypad:

KPC-CC01

Communication Interface
RJ-45 (socket) , RS-485(Interface)

Installation

- ☑ **Embedded type and can be put flat on the surface of the control box. The front cover is waterproof.**
- ☑ **Buy a MKC-KPPK model to do wall mounting or embedded mounting. Its protection level is IP66.**
- ☑ **The maximum RJ45 extension lead is 5 m (16ft)**

Descriptions of Keypad Functions

Key	Descriptions
RUN	Start Operation Key 1. It is only valid when the source of operation command is from the keypad. 2. It can operate the hybrid servo drive by the function setting and the RUN LED will be on. 3. It can be pressed repeatedly during stop. 4. When enabling “HAND” mode, it is only valid when the source of operation command is from the keypad.
STOP RESET	Stop Command Key. This key has the highest processing priority in any situation. 1. When it receives STOP command, no matter the hybrid servo drive is in operation or stop status, the hybrid servo drive needs to execute “STOP” command. 2. The RESET key can be used to reset the drive after the fault occurs. For those faults that cannot be reset by the RESET key, see the fault records after pressing MENU key for details.
FWD REV	Operation Direction Key 1. This key is only control the operation direction NOT for activate the drive. FWD: forward, REV: reverse. 2. Refer to the LED descriptions for more details.
ENTER	ENTER Key Press ENTER and go to the next level. If it is the last level then press ENTER to execute the command.
ESC	ESC Key ESC key function is to leave current menu and return to the last menu. It is also functioned as a return key in the sub-menu.
MENU	Press menu to return to main menu.
^ < > v	Direction: Left/Right/Up/Down 1. In the numeric value setting mode, it is to move the cursor and change the numeric value. 2. In the menu/text selection mode, it is for item selection.
F1 F2 F3 F4	Function Key 1. The functions keys have factory settings and can be defined by users. 2. Other functions must be defined by TPEditor first.
HAND	HAND Key 1. This key is controlled by the parameter settings of the source of Hand frequency and hand operation. The factory settings of both source of Hand frequency and hand operation are the digital keypad. 2. Press HAND key at stop, the setting will switch to hand frequency source and hand operation source. Press HAND key when the hybrid servo drive is running, it stops the hybrid servo drive first (display AHSP warning), and switch to hand frequency source and hand operation source.
AUTO	1. This key is controlled by the parameter settings of the source of AUTO frequency and AUTO operation. The factory setting is the external terminal (source of operation is 4-20mA). 2. Press Auto key at stop, the setting will switch to hand frequency source and hand operation source. Press Auto key when the hybrid servo drive is running, it stops the hybrid servo drive first (display AHSP warning), and switch to auto frequency source and auto operation source.

Descriptions of LED Functions

LED	Descriptions
RUN	Steady ON: operation indicator of the hybrid servo drive, including DC brake, zero speed, standby, restart after fault and speed search. Blinking: drive is decelerating to stop or in the status of base block. Steady OFF: drive doesn't execute the operation command
STOP RESET	Steady ON: stop indicator of the hybrid servo drive. Blinking: drive is in the standby status. Steady OFF: drive does not execute "STOP" command.
FWD REV	Operation Direction LED 1. Green light is on, the drive is running forward. 2. Red light is on, the drive is running backward. 3. Twinkling light: the drive is changing direction.

Characters of Digital Keypad Displayed on the LCD

Number	0	1	2	3	4	5	6	7	8	9
LCD	0	1	2	3	4	5	6	7	8	9
Alphabet	A	b	Cc	d	E	F	G	Hh	I	Jj
LCD	A	b	C c	d	E	F	G	H h	I	J j
Alphabet	K	L	n	Oo	P	q	r	S	Tt	U
LCD	K	L	n	O o	P	q	r	S	Tt	U
Alphabet	v	Y	Z							
LCD	v	Y	Z							

A-6 EMI Filter

VJ-C Air Cooled Models::

Drive	Applicable Filter Model #	Reference Website
VFD110VL43C-J	B84143A0050R106	Power Line EMC Filter (EPCOS)
VFD150VL43C-J		
VFD185VL43C-J		
VFD220VL43C-J		
VFD300VL43A-J, VFD300VL43C-J	B84143A0100R106	
VFD370VL43A-J, VFD370VL43C-J		
VFD450VL43A-J, VFD450VL43C-J	B84143D0200R127	
VFD550VL43A-J, VFD550VL43C-J		
VFD750VL43A-J, VFD750VL43C-J		
VFD300VL23C-J		
VFD370VL23C-J		

https://www.tdk-electronics.tdk.com/en/530116/products/product-catalog/emc-components/power-line-emc-filters--epcos-

EMI Filter Installation

All electrical equipment, including hybrid drives, will generate high-frequency/low-frequency noise and will interfere with peripheral equipment by radiation or conduction when in operation. By using an EMI filter with correct installation, much interference can be eliminated. It is recommended to use DELTA EMI filter to have the best interference elimination performance.

We assure that it can comply with following rules when hybrid drive and EMI filter are installed and wired according to user manual:

- **EN61000-6-4**
- **EN61800-3: 1996**
- **EN55011 (1991) Class A Group 1 (1st Environment, restricted distribution)**

General precaution

1. EMI filter and hybrid drive should be installed on the same metal plate.
2. Please install hybrid drive on footprint EMI filter or install EMI filter as close as possible to the hybrid drive.
3. Please wire as short as possible.
4. Metal plate should be grounded.
5. The cover of EMI filter and hybrid drive or grounding should be fixed on the metal plate and the contact area should be as large as possible.

Choose suitable motor cable and precautions

Improper installation and choice of motor cable will affect the performance of EMI filter. Be sure to observe the following precautions when selecting motor cable.

1. Use the cable with shielding (double shielding is the best).
2. The shielding on both ends of the motor cable should be grounded with the minimum length and maximum contact area.
3. Remove any paint on metal saddle for good ground contact with the plate and shielding.

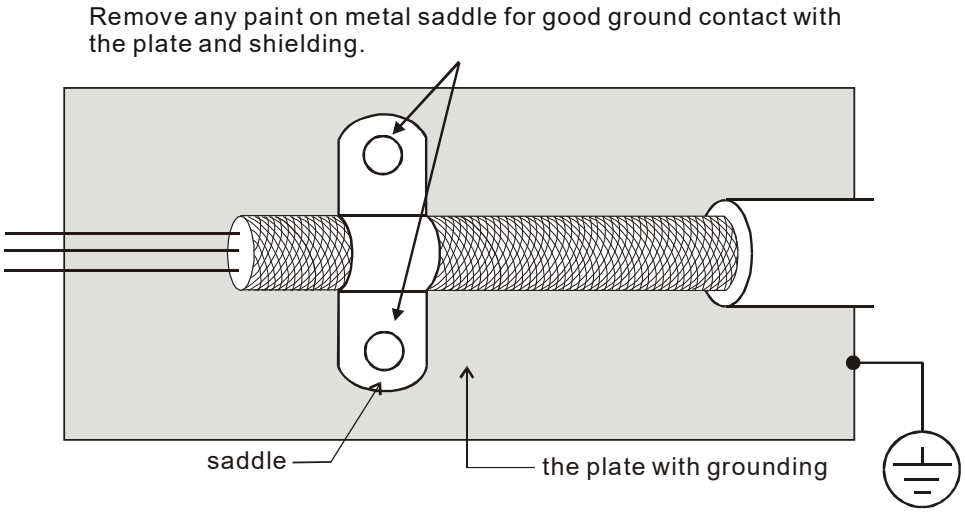

Figure 1

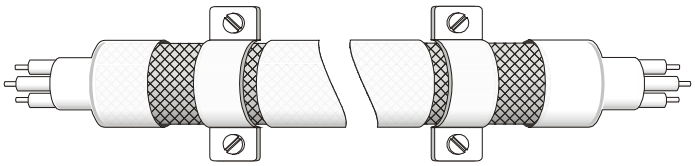

Saddle on both ends

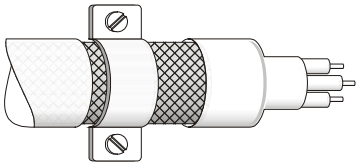

Saddle on one end

Figure 2

The length of motor cable

When motor is driven by a hybrid drive of PWM type, the motor terminals will experience surge voltages easily due to components conversion of hybrid drive and cable capacitance. When the motor cable is very long (especially for the 460V series), surge voltages may reduce insulation quality. To prevent this situation, please follow the rules below:

- Use a motor with enhanced insulation.
- Connect an output reactor (optional) to the output terminals of the hybrid drive
- The length of the cable between hybrid drive and motor should be as short as possible (10 to 20 m or less)
- For models 7.5hp and above:

Insulation level of motor	1000V	1300V	1600V
$460V_{AC}$ input voltage	66 ft (20m)	328 ft (100m)	1312 ft (400m)
$230V_{AC}$ input voltage	1312 ft (400m)	1312 ft (400m)	1312 ft (400m)

NOTE

Never connect phase lead capacitors or surge absorbers to the output terminals of the hybrid drive.

- If the length is too long, the stray capacitance between cables will increase and may cause leakage current. It will activate the protection of over current, increase leakage current or not insure the correction of current display. The worst case is that hybrid drive may damage.
- If more than one motor is connected to the hybrid drive, the total wiring length is the sum of the wiring length from hybrid drive to each motor.
- For the 460V series hybrid drive, when an overload relay is installed between the drive and the motor to protect motor from overheating, the connecting cable must be shorter than 50m. However, an overload relay malfunction may still occur. To prevent the malfunction, install an output reactor (optional) to the drive or lower the carrier frequency setting (Pr.00-17).

NOTE

When a thermal O/L relay protected by motor is used between hybrid drive and motor, it may malfunction (especially for 460V series), even if the length of motor cable is only 165 ft (50m) or less. To prevent it, please use AC reactor and/or lower the carrier frequency (Pr. 00-17 PWM carrier frequency).

A-7 Speed Feedback Encoder

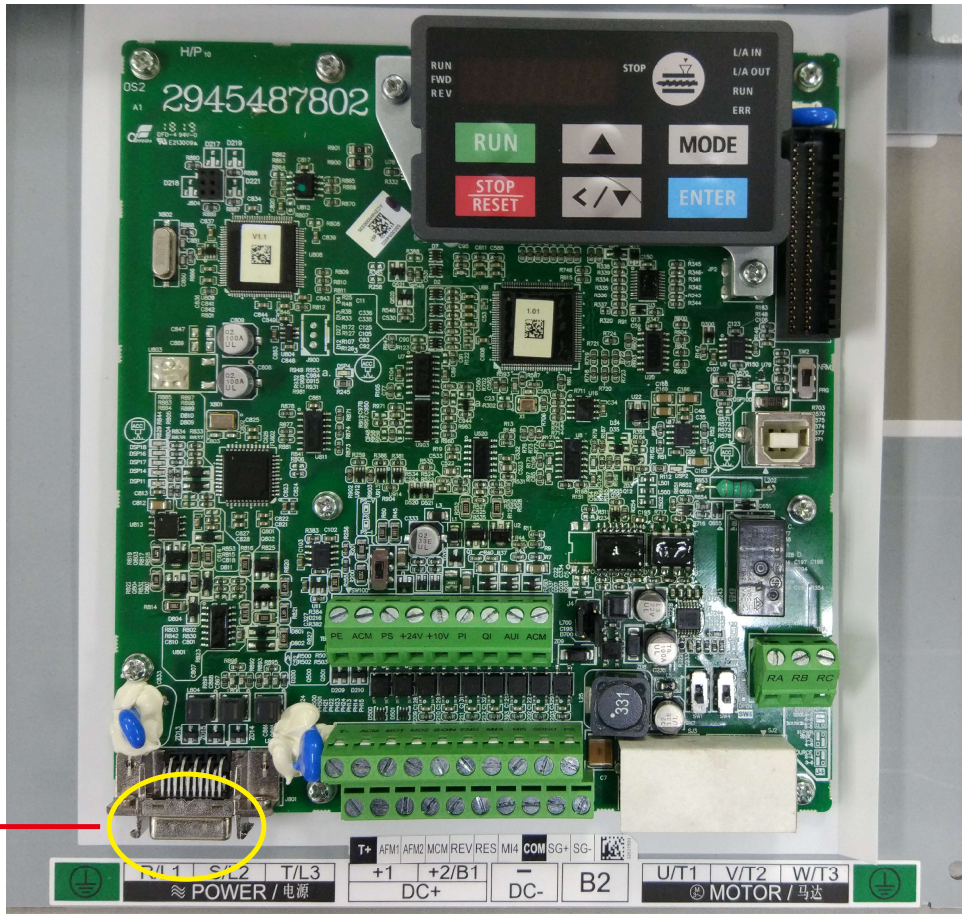

Function of J1 Terminal

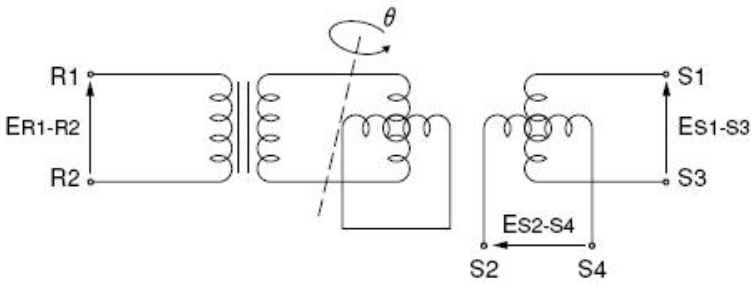

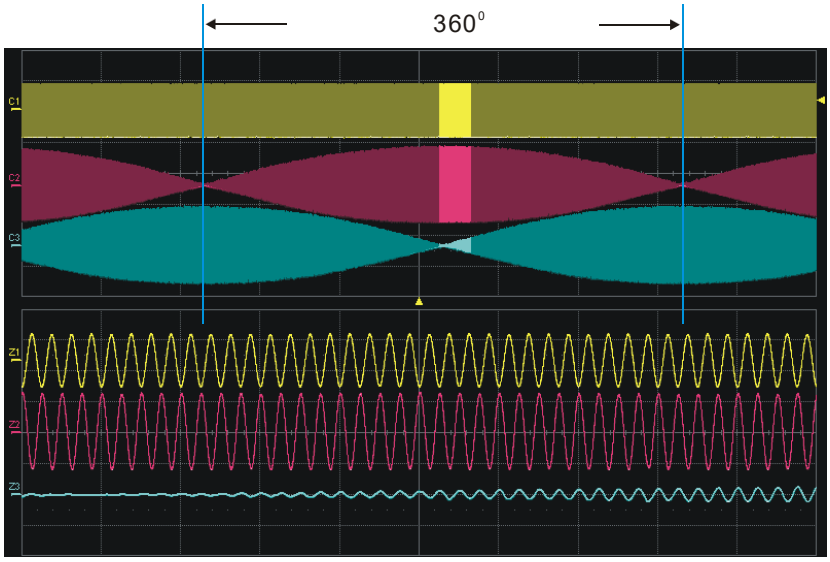

As shown in the image above, from top to bottom: C1『E_{R1-R2}』, C2『E_{S1-S3}』, C3『E_{S2-S4}』

Pin #	Terminal	Function	Specification
4	SIN- (S4)	Resolver output signal	3.5±0.175Vrms, 10kHz
5	SIN+ (S2)		
7	COS+ (S1)		
9	COS- (S3)		
14,16	REF+ (R1)	Resolver input power	7Vrms, 10kHz
13,15	REF- (R2)		
	blocked	Blocked	

Selection of Wiring Rod

Encoder Wiring — Wire Gauge mm² (AWG)			
Size	# of cores (pairs)	Specification	Standard Length
0.13 mm²(AWG26)	10 cores(4 pairs)	UL2464	3m (9.84 ft)

NOTE

1) Please use shielded twisted-pair cable for encoder wiring so as to reduce the interference of the noise.

2) The shield should connect to the ⏚ phase of SHIELD.

3) Please follow the Selection of Wire Rod when wiring in order to avoid the danger it may occur.

Connector Specification

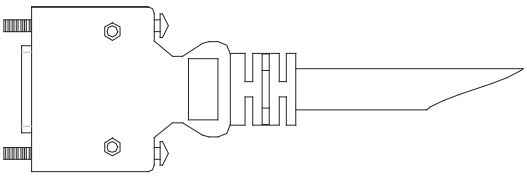

Title	Part #	Manufacturer
PLUG	3M 10120-3000PE	3M
SHELL	3M 10320-52A0-008	3M

A-8 Wall-Mounted Installation

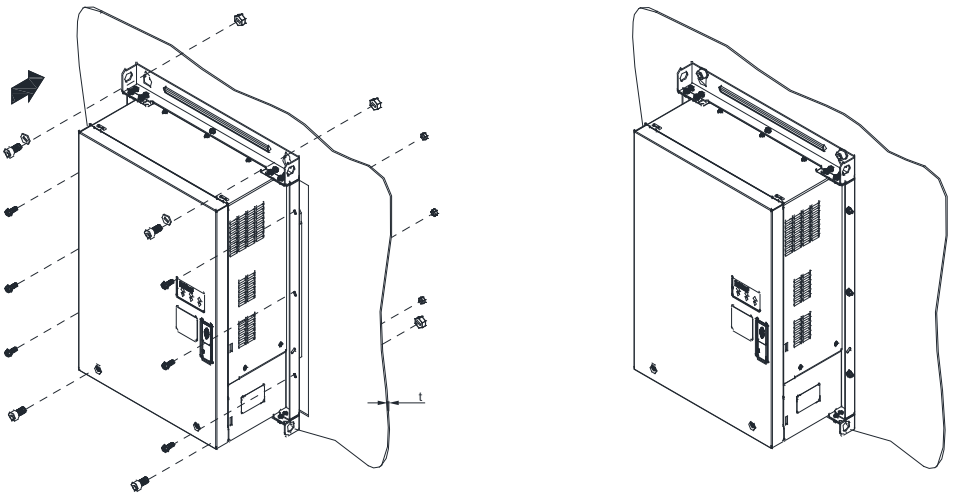

Push the hybrid servo drive through the wall, then fasten 4 pieces of M10 screw, 6 pieces of M6 screw an their nuts to fix the hybrid servo drive.

- M10 screw length L1 = t (wall thickness) +16mm. srew torque = 200Kg-cm [173.4lb-in.]
- M6 srew length L2 = t (wall thickness) + 12mm, scfew torque = 40Kg-cm [34.7lb-in.]

Cutout Dimensions:

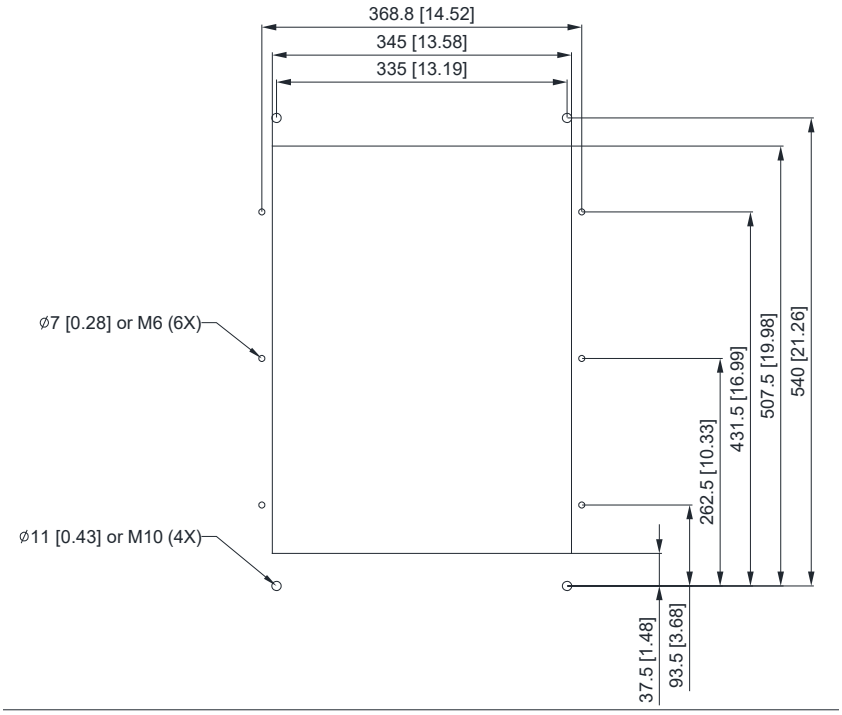

Appendix B: CANopen Overview

B-1 CANopen Overview

B-2 Wiring for CANopen

B-3 CANopen Communication Interface Description

B-4 CANopen Supporting Index

The built-in CANopen function is a kind of remote control. You can control the AC motor drive using the CANopen protocol. CANopen is a CAN-based higher layer protocol that provides standardized communication objects, including real-time data (Process Data Objects, PDO), configuration data (Service Data Objects, SDO), and special functions (Time Stamp, Sync message, and Emergency message). It also has network management data, including Boot-up message, NMT message, and Error Control message. Refer to the CiA website http://www.can-cia.org/ for details. The content of this instruction sheet may be revised without prior notice. Consult our distributors or download the most updated version at http://www.delta.com.tw/industrialautomation

Delta CANopen supported functions:

- Supports CAN2.0A Protocol
- Supports CANopen DS301 V4.02
- Supports DSP-402 V2.0

Delta CANopen supported services:

- PDO (Process Data Objects): PDO1–PDO4
- SDO (Service Data Object):

  Initiate SDO Download;
  Initiate SDO Upload;
  Abort SDO;
  You can use the SDO message to configure the slave node and access the Object Dictionary in every node.
- SOP (Special Object Protocol):

  Supports default COB-ID in Predefined Master/Slave Connection Set in DS301 V4.02;
  Supports SYNC service;
  Supports Emergency service.
- NMT (Network Management):
  Supports NMT module control;
  Supports NMT Error control;
  Supports Boot-up.

Delta CANopen does not support this service:

- Time Stamp service

B-1 CANopen Overview

● CANopen Protocol

CANopen is a CAN-based higher layer protocol, and was designed for motion-oriented machine control networks such as handling systems. Version 4.02 of CANopen (CiA DS301) is standardized as EN50325-4. The CANopen specifications cover the application layer and communication profile (CiA DS301), as well as a framework for programmable devices (CiA 302), recommendations for cables and connectors (CiA 303-1) and SI units and prefix representations (CiA 303-2).

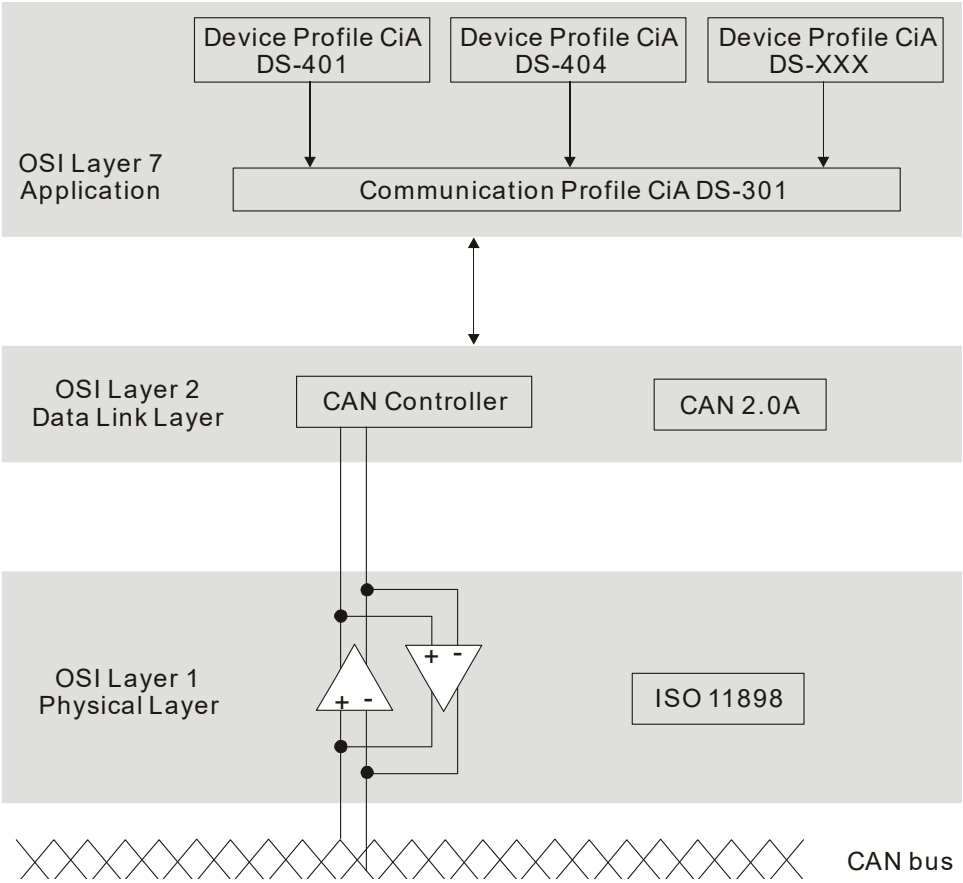

RJ-45 Pin Definition

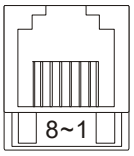

plug

PIN	Signal	Description
1	CAN_H	CAN_H bus line (dominant high)
2	CAN_L	CAN_L bus line (dominant low)
3	CAN_GND	Ground / 0 V /V-
6	CAN_GND	Ground / 0 V /V-

CANopen Communication Protocol contains the following services:

- NMT (Network Management Object)
- SDO (Service Data Objects)
- PDO (Process Data Object)
- EMCY (Emergency Object)

NMT (Network Management Object)

The Network Management (NMT) follows a Master/Slave structure for executing NMT service. A network has only one NMT master, and the other nodes are slaves. All CANopen nodes have a present NMT state, and the NMT master can control the state of the slave nodes. The following shows the state diagram of a node:

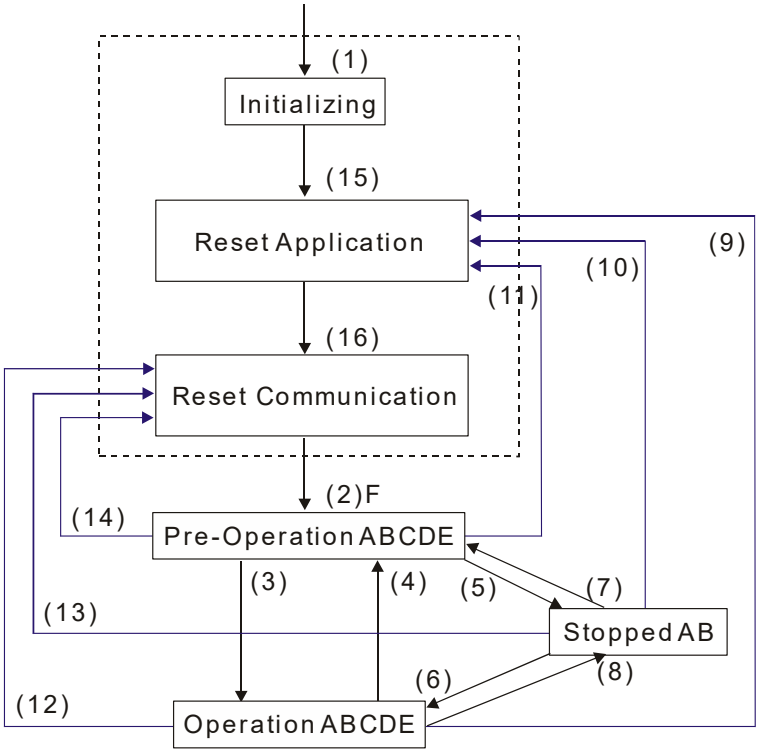

(1) After power is applied, start in the auto-initialization state
(2) Automatically enter the pre-operational state
(3) (6) Start remote node
(4) (7) Enter the pre-operational state
(5) (8) Stop remote node
(9) (10) (11) Reset node
(12) (13) (14) Reset communication
(15) Automatically enter reset application state
(16) Automatically enter reset communication state

A: NMT
B: Node Guard
C: SDO
D: Emergency
E: PDO
F: Boot-up

	Initializing	Pre-Operational	Operational	Stopped
PDO			○	
SDO		○	○	
SYNC		○	○	
Time Stamp		○	○	
EMCY		○	○	
Boot-up	○			
NMT		○	○	○

SDO (Service Data Objects)

Use SDO to access the Object Dictionary in every CANopen node using the Client/Server model. One SDO has two COB-IDs (request SDO and response SDO) to upload or download data between two nodes. There is no data limit for SDOs to transfer data, but it must transfer data by segment when the data exceeds four bytes with an end signal in the last segment. The VJ series does not currently support segment transmission.

The Object Dictionary (OD) is a group of objects in a CANopen node. Every node has an OD in the system, and OD contains all parameters describing the device and its network behavior. The access path in the OD is the index and sub-index; each object has a unique index in the OD, and has a sub-index if necessary. The following shows the request and response frame structure of SDO communication:

PDO (Process Data Object)

PDO communication can be described by the producer/consumer model. Each node of the network listens to the messages of the transmission node and distinguishes whether the message has to be processed or not after receiving the message. A PDO can be transmitted from one device to one another device or to many other devices. Every PDO has two PDO services: a TxPDO and an RxPDO. PDOs are transmitted in a non-confirmed mode. All transmission types are listed in the following table:

Type Number	PDO				
	Cyclic	Acyclic	Synchronous	Asynchronous	RTR only
0		○	○		
1-240	○		○		
241-251	Reserved				
252			○		○
253				○	○
254				○	
255				○	

Type number 0 indicates the synchronous aperiodic message between two PDO transmissions.
Type number 1-240 indicates the number of SYNC message between two PDO transmissions.
Type number 252 indicates the data is updated (but not sent) immediately after receiving SYNC.
Type number 253 indicates the data is updated immediately after receiving RTR.
Type number 254: Delta CANopen doesn’t support this transmission format.
Type number 255 indicates the data is an asynchronous aperiodic transmission.

All PDO transmission data must be mapped to the index with Object Dictionary.

EMCY (Emergency Object)

When errors occur inside the hardware, an emergency object is triggered. An emergency object is only sent when an error occurs. As long as there is nothing wrong with the hardware, there is no emergency object warning of an error message.

B-2 Wiring for CANopen

The wiring between CANopen and VJ doesn't require any external communication card. Use an RJ45 cable to connect CANopen to a VJ. You must terminate the two farthest ends with 120Ω terminating resistors as shown in the picture below.

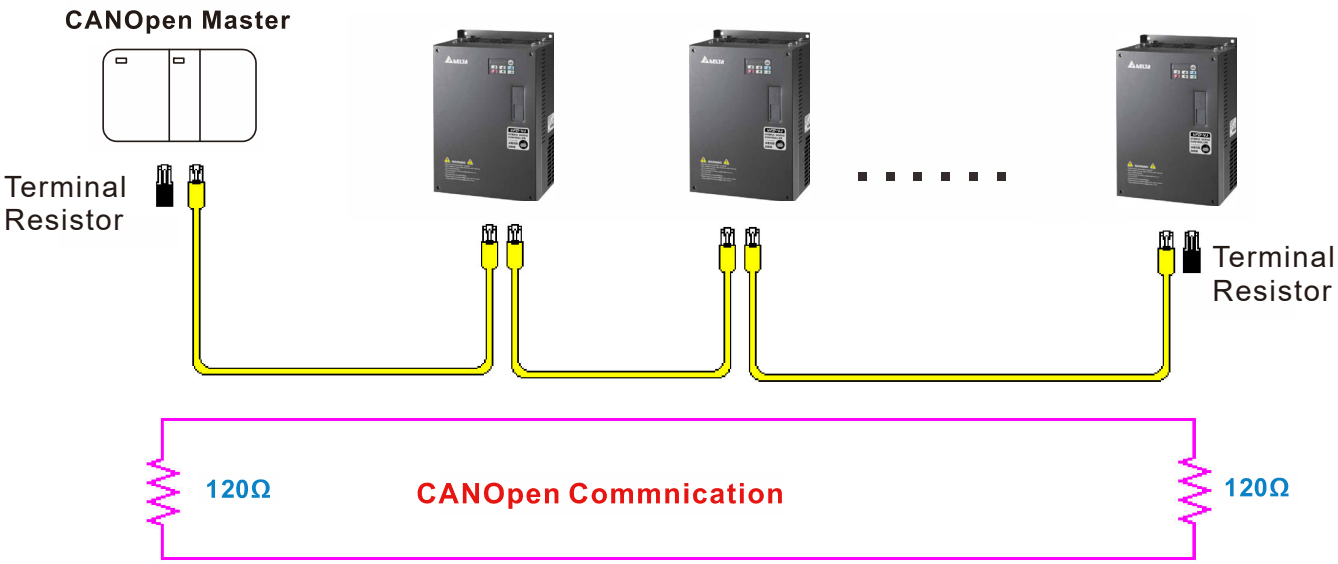

B-3 CANopen Communication Interface Descriptions

B-3-1 CANopen Control Mode Selection

There are two control modes for CANopen: the DS402 standard (Pr.04-20 set to 1) is the factory setting, and the Delta's standard setting (Pr.04-20 set to 0). There are two control modes according to Delta's standard. One is the old control mode (Pr.04-24=0); this control mode can only control the motor drive under frequency control. The other mode is a new standard (Pr.04-24=1); this new control mode allows the motor drive to be controlled under multiple modes. The VJ currently supports speed mode. The following table shows the control mode definitions:

CANopen control mode	Control mode		
	Speed		
	Index	Description	
DS402 Pr.04-20=1	6042-00	Target rotating speed (RPM)	
	-----	-----	
Delta Standard (Old definition) Pr.04-20=0, Pr.04-24=0	2020-02	Target rotating speed (Hz)	
Delta Standard (New definition) Pr.04-20=0, Pr.04-24=1	2060-03	Target rotating speed (Hz)	
	2060-04	Torque limit (%)	

CANopen control mode	Operation control	
	Index	Description
DS402 Pr.04-20=1	6040-00	Operation Command
	-----	-----
Delta Standard (Old definition) Pr.04-20=0, Pr.04-24=0	2020-01	Operation Command
Delta Standard (New definition) Pr.04-20=0, Pr.04-24=1	2060-01	Operation Command
	-----	-----

CANopen control mode	Other	
	Index	Description
DS402 Pr.04-20=1	605A-00	Quick stop processing mode
	605C-00	Disable operation processing mode
Delta Standard (Old definition) Pr.04-20=0, Pr.04-24=0	-----	-----
Delta Standard (New definition) Pr.04-20=0, Pr.04-24=1	-----	-----
	-----	-----

You can use some indices in either DS402 or Delta's standard. For example:

1. Indices that are defined as RO attributes
2. The corresponding index of available parameter groups: (2000-00–200E-XX)
3. Accelerating/Decelerating Index: 604F 6050

B-3-2 DS402 Standard Control Mode

B-3-2-1 Related set up for an AC motor drive (following the DS402 standard)

If you want to use the DS402 standard to control the motor drive, follow these steps:

1. Wire the hardware (refer to chapter B-2 Wiring for CANopen).
2. Set the operation source: set Pr.01-01 to 3 for CANopen communication card control.
3. Set the frequency source: set Pr.03-15 to 6. Choose the source for the Frequency command from the CANopen setting.
4. Set DS402 for the control mode: Pr.04-20=1
5. Set the CANopen station: set the CANopen station (range 1-127, 0 is the disable CANopen slave function) with Pr.04-17. Note: set Pr.00-02 = 7 to reset if the station number error CAdE or CANopen memory error CFrE appears.
6. Set the CANopen baud rate: set Pr.04-18 (CANBUS Baud Rate: 1M (0), 500K (1), 250K (2), 125K (3), 100K (4) or 50K (5)).

B-3-2-2 The status of the motor drive (by following DS402 standard)

According to the DS402 definition, the motor drive is divided into 3 blocks and 9 statuses as described below.

3 blocks

1. Power Disable: without PWM output
2. Power Enable: with PWM output
3. Fault: one or more errors have occurred.

9 status

1. Start: power on
2. Not Ready to Switch On: the motor drive is initiating.
3. Switch On Disable: occurs when the motor drive finishes initiating.
4. Ready to Switch On: warming up before running.
5. Switch On: the motor drive has the PWM output, but the reference command is not effective.
6. Operate Enable: able to control normally.
7. Quick Stop Active: when there is a Quick Stop request, stop running the motor drive.
8. Fault Reaction Active: the motor drive detects conditions which might trigger error(s).
9. Fault: one or more errors have occurred in the motor drive.

When the motor drive is turned on and finishes the initiation, it remains in Ready to Switch On status. To control the operation of the motor drive, change to Operate Enable status. To do this, set the control word's bit0–bit3 and bit7 of the Index 6040H and pair with Index Status Word (Status Word 0X6041). The control steps and index definition are described below:

Index 6040

15–9	8	7	6–4	3	2	1	0
Reserved	Halt	Fault Reset	Operation	Enable operation	Quick Stop	Enable Voltage	Switch On

Index 6041

15–14	13–12	11	10	9	8	7	6	5	4	3	2	1	0
Reserved	Operation	Internal limit active	Target reached	Remote	Reserved	Warning	Switch on disabled	Quick stop	Voltage enabled	Fault	Operation enable	Switch on	Ready to switch on

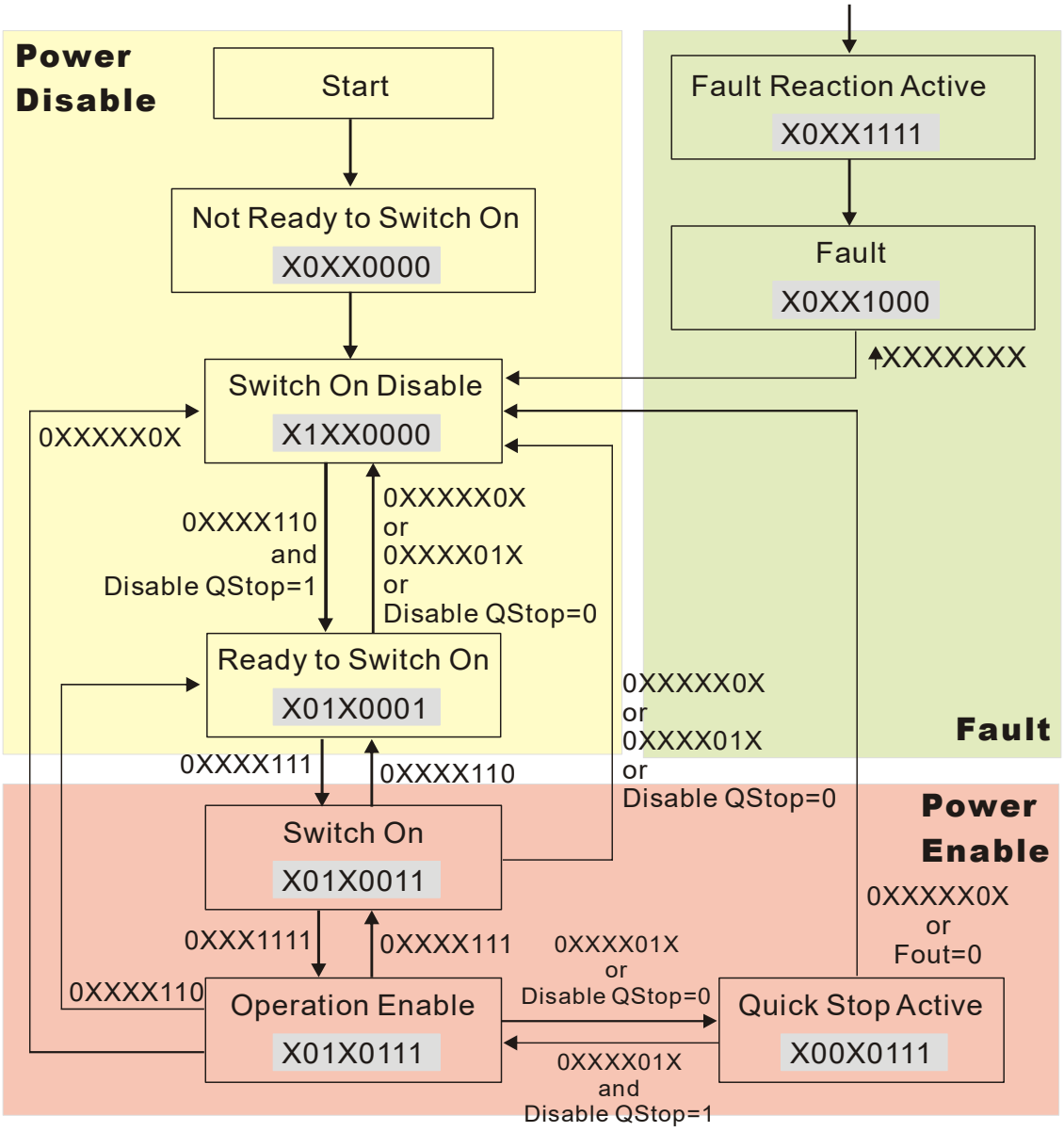

Set command 6040=0xE, then set another command 6040=0xF. Then you can switch the motor drive to Operation Enable. The Index 605A determines the direction of the lines from Operation Enable when the control mode changes from Quick Stop Active. When the setting value is 5–7, both lines are active, but when the setting value of 605A is not 5–7, once the motor drive is switched to Quick Stop Active, it is not able to switch back to Operation Enable.

Index	Sub	Definition	Factory Setting	R/W	Size	Unit	PDO Map	Mode	note
605Ah	0	Quick stop option code	2	RW	S16		No		0: Disable drive function 1: Slow down on slow down ramp 2: Slow down on quick stop ramp 5: Slow down on slow down ramp and stay in Quick Stop 6: Slow down on quick stop ramp and stay in Quick Stop 7: Slow down on the current limit and stay in Quick Stop

When the control section switches from Power Enable to Power Disable, use 605C to define the parking method.

Index	Sub	Definition	Factory Setting	R/W	Size	Unit	PDO Map	Mode	note
605Ch	0	Disable operation option code	1	RW	S16		No		0: Disable drive function 1: Slow down with slow down ramp; disable the drive function

B-3-2-3 Various mode control method (by following DS402 standard)

Speed mode

1. Set VJ to speed control mode: set Index6060 to 2.
2. Switch to Operation Enable mode: set 6040=0xE, then set 6040=0xF.
3. Set the target frequency: set target frequency for 6042, since the operation unit of 6042 is rpm, a transform is required:

$$n = f \times \frac{120}{p}$$

n: rotation speed (rpm) (rounds/minute) p: number of poles in the motor (Pole)

f: rotation frequency (Hz)

For example:

Set 6042H = 1500 (rpm), if the number of poles is 4 (Pr.05-04 or Pr.05-16), then the motor drive's operation frequency is 1500 (120/4) = 50 Hz. The 6042 is defined as a signed operation. The plus or minus sign means to rotate clockwise or counter–clockwise.

4. To set acceleration and deceleration: use 604F (Acceleration) and 6050 (Deceleration).
5. Trigger an ACK signal: in the speed control mode, the bit 6–4 of Index 6040 needs to be controlled. It is defined below:

	Index 6040			SUM
	Bit 6	Bit 5	Bit 4	
Speed mode (Index 6060=2)	1	0	1	Locked at the current signal.
	1	1	1	Run to reach targeting signal.
	Other			Decelerate to 0 Hz.

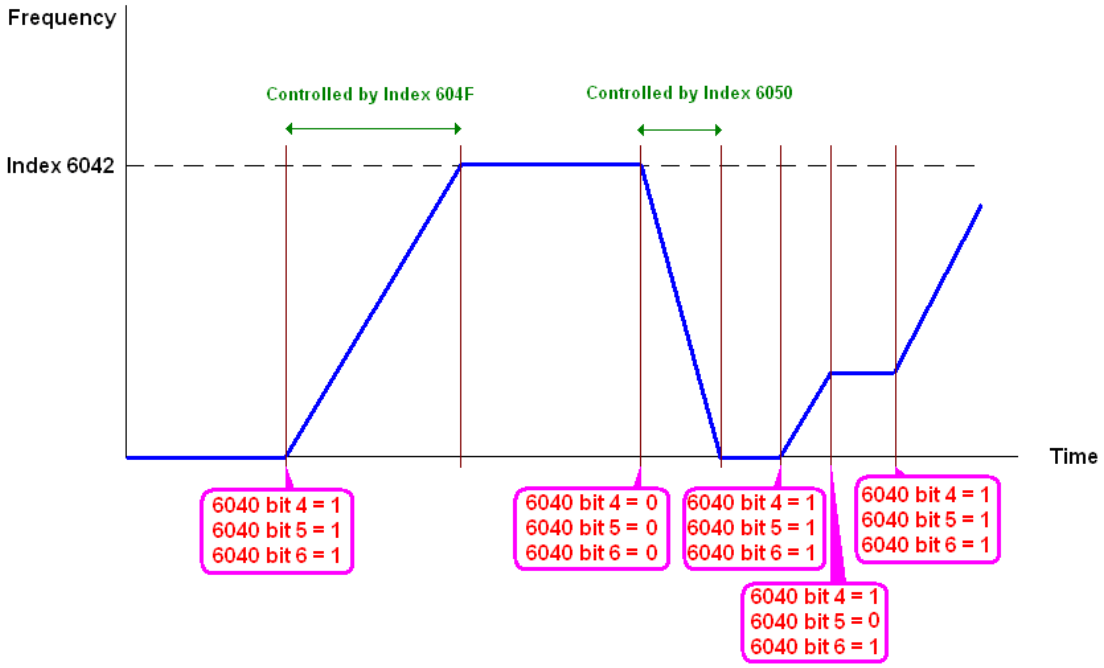

NOTE 01: Read 6043 to get the current rotation speed (unit: rpm).

NOTE 02: Read bit 10 of 6041 to find if the rotation speed has reached the targeting value (0: Not reached; 1: Reached).

B-3-3 Using Delta Standard (Old definition)

B-3-3-1 Various mode control method (Delta Old Standard).

Follow the steps below:

1. Wire the hardware (refer to Section B-2 Wiring for CANopen).
2. Set the operation source: set Pr.01-01 to 3 for CANopen communication card control.
3. Set the frequency source: set Pr.03-15 to 6. Choose the source for the Frequency commend from the CANopen setting.
4. Set Delta Standard (Old definition, only supports speed mode) as the control mode: Pr.04-20 = 0 and Pr.04-24 = 0.
5. Set the CANopen station: set Pr.09-36; the range is between 1–127. When Pr.09-36=0, the CANopen slave function is disabled. Note: if an error appears (CAdE or CANopen memory error) as you complete the station setting, set Pr.00-02=10 to reset.
6. Set the CANopen baud rate: set Pr.04-18 (CANBUS Baud Rate: 1M (0), 500K (1), 250K (2), 125K (3), 100K (4) and 50K (5))

B-3-3-2 By speed mode

1. Set the target frequency: set 2020-02, the unit is Hz, with 2 decimal places. For example 1000 is 10.00 Hz.
2. Operation control: set 2020-01 = 0002H for running, and set 2020-01 = 0001H for stopping.

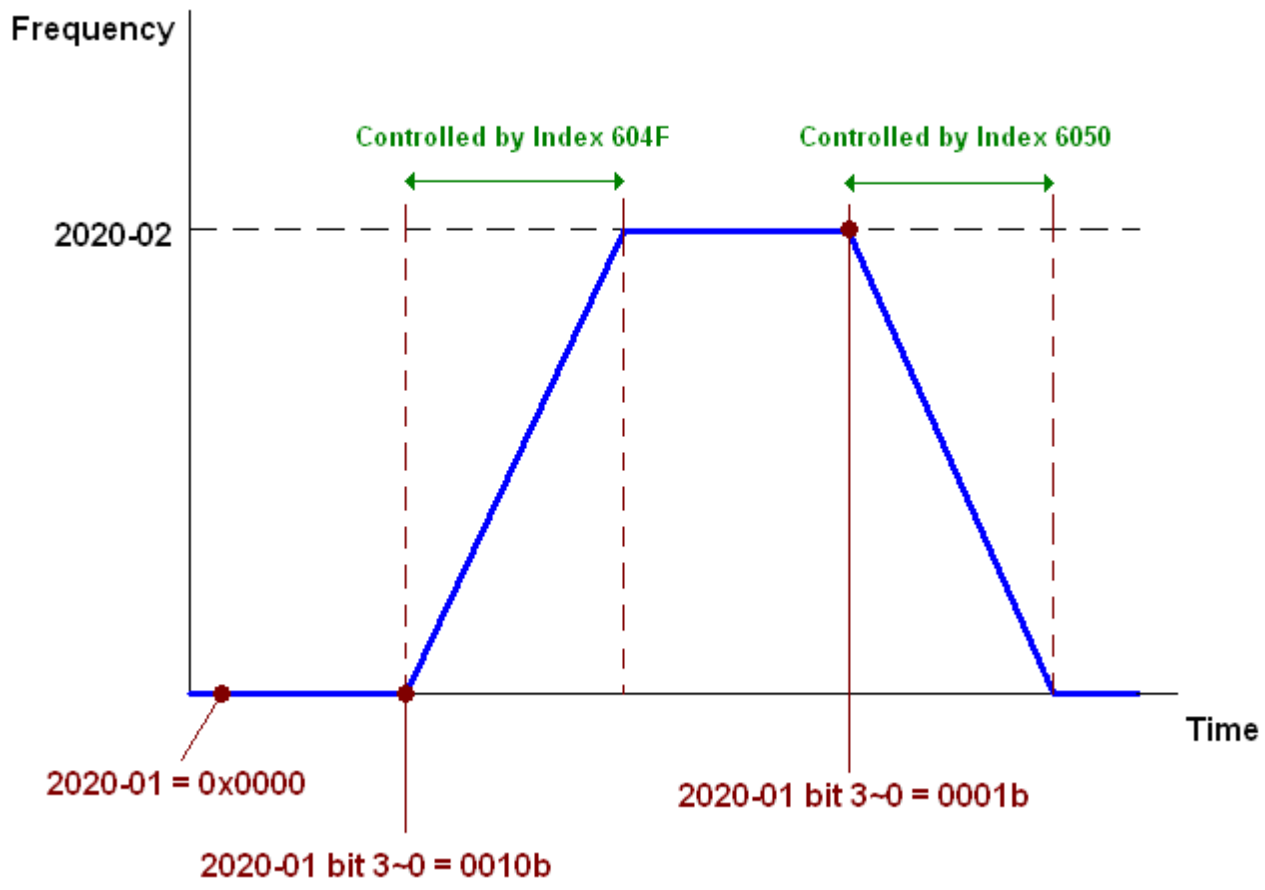

B-3-4 Using Delta Standard (New definition)

B-3-4-1 Related set up for an AC motor drive (Delta New Standard)

Follow the steps below:

1. Wire the hardware (refer to Section B-2 Wiring for CANopen).
2. Set the operation source: set Pr.01-01 to 3 for CANopen communication card control.
3. Set the frequency source: set Pr.03-15 to 6. Choose the source for the Frequency command from the CANopen setting.
4. Set Delta Standard (New definition) as the control mode: Pr.04-20 = 0 and 04-24 = 1.
5. Set the CANopen station: set Pr.04-17; the range is between 1–127. When Pr.04-17=0, the CANopen slave function is disabled. Note: if an error appears (CAdE or CANopen memory error) as you complete the station setting, set Pr.00-02=10 to reset.
6. Set the CANopen baud rate: set Pr.04-18 (CANBUS Baud Rate: 1M (0), 500K (1), 250K (2), 125K (3), 100K (4) and 50K (5))

B-3-4-2 Various mode control method (Delta New Standard)

Speed Mode

1. Set VJ to speed control mode: set index 6060 = 2 .
2. Set the target frequency: set 2060-03, unit is Hz, with 2 decimal places. For example 1000 is 10.00 Hz.
3. Operation control: set 2060-01 = 0080H for server on, and set 2060-01 = 0081H for running.

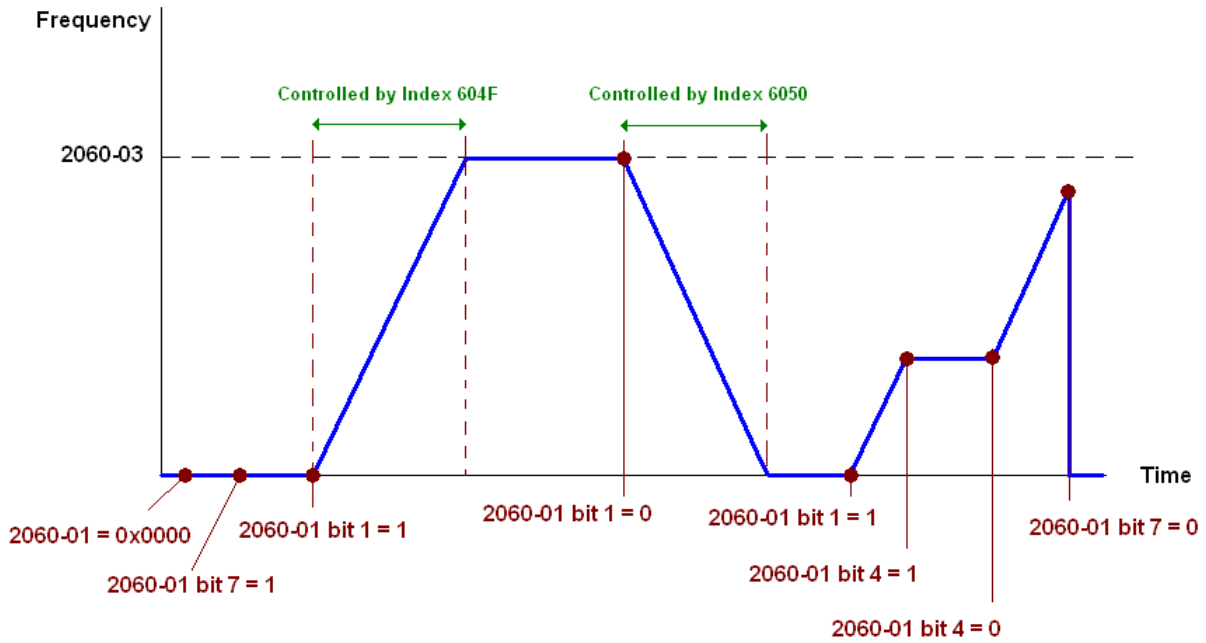

B-4 CANopen Supporting Index

VJ Index:

The parameter index corresponds as shown in this example:

Index	**sub-Index**
2000H + Group	member+1

For example:

Pr.01-01 (Source of operation command)

Group		**member**
01(01H)	-	01(01H)

Index = 2000H + 01H = 2001
Sub Index = 01H + 1H = 2H

VJ Control Index:

Delta Standard Mode (Old definition)

Index	Sub	Definition	Factory Setting	R/W	Size	Note	
2000H	2D	Pressure Cmmand	0	RW	U16		
	2E	Flow Command	0	RW	U16		
2020H	0	Number	3	R	U8		
	1	Control word	0	RW	U16	Bit 1–0	00B:Disable
							01B:Stop
							10B:Disable
							11B: JOG Enable
						Bit3–2	Reserved
						Bit5–4	00B:Disable
							01B: Direction forward
							10B: Direction reverse
							11B: Switch direction
						Bit7–6	Reserved
						Bit11–8	Reserved
						Bit12	Reserved
						Bit14–13	00B: No function
							01B: Operation command by the digital keypad
							10B: Operation command according to Pr.01-01 setting
							11B: Switch the source of operation command
						Bit 15	Reserved
	2	Freq. command (XXX.XX Hz)	0	RW	U16		
	3	Other trigger	0	RW	U16	Bit0	1: E.F. ON
						Bit1	1: Reset
						Bit15–3	Reserved
2021H	0	Number	10	R	U8		
	1	Error code	0	R	U16		High byte: Warn Code Low Byte: Error Code
	2	AC motor drive status	0	R	U16	Bit 1–0	00B: Stop
							01B: Decelerate to stop
							10B: Waiting for operation command
							11B: In operation
						Bit 2	Reserved
						Bit 4–3	00B: Run forward
							01B: Switch from run in reverse

Index	Sub	Definition	Factory Setting	R/W	Size	Note	
							to run forward
							10B: Switch from run forward to run in reverse
							11B: Run in reverse
						Bit 7–5	Reserved
						Bit 8	1: Master Frequency command controlled by communication interface
						Bit 9	1: Master Frequency command controlled by analog / external terminal signal input
						Bit 10	1: Operation command controlled by communication interface
						Bit 11	1: Parameter lock
						Bit 12	Reserved
						Bit 15–13	Reserved
	3	Frequency command (XXX.XXHz)	0	R	U16		
	4	Output freq. (XXX.XX Hz)	0	R	U16		
	5	Output current (XXX.XX A)	0	R	U16		
	6	DC BUS voltage (XXX.X V)	0	R	U16		
	7	Output voltage (XXX.X V)	0	R	U16		
	8	Reserved	0	R	U16		
	9	Reserved	0	R	U16		
	A	Reserved	0	R	U16		
	B	Reserved	0	R	U16		
	C	Reserved	0	R	U16		
	D	Reserved	0	R	U16		
	E	Reserved	0	R	U16		
	F	Reserved	0	R	U16		
	10	Reserved	0	R	U16		
	17	Multi-function display (Pr.00-04)	0	R	U16		
2022H	0	Reserved	0	R	U16		
	1	Display output current (XX.XXA)	0	R	U16		
	2	Display counter value	0	R	U16		
	3	Display actual output frequency(XXX.XX Hz)	0	R	U16		
	4	Display DC-BUS voltage (XXX.X V)	0	R	U16		
	5	Display output voltage (XXX.X V)	0	R	U16		
	6	Display output power angle (XXX.X°)	0	R	U16		
	7	Display output power by U, V, W in kW (XX.XXX kW)	0	R	U16		
	8	Display actual motor speed (XXXXX rpm)	0	R	U16		
	9	Display estimate output torque (XXX.X%)	0	R	U16		
	A	Display PG feedback	0	R	U16		
	B	Reserved	0	R	U16		
	C	Display signal for PS analog	0	R	U16		

Index	Sub	Definition	Factory Setting	R/W	Size	Note	
		input terminal, 4~20mA/ 0–10 V corresponds to 0–100% (to two decimal places)					
	D	Display signal of PI analog input terminal, 0~10 V corresponds to 0 ~100% (to two decimal places)	0	R	U16		
	F	Display the IGBT temperature of drive power module (XXX.X°C)	0	R	U16		
	10	Display motor drive's capacitor temperature (XXX.X°C)	0	R	U16		
	11	The status of digital input (ON/OFF), refer to Pr.02-12	0	R	U16		
	12	The status of digital output (ON/OFF), refer to Pr.02-18	0	R	U16		
	13	Reserved	0	R	U16		
	14	The corresponding CPU pin status of digital input	0	R	U16		
	15	The corresponding CPU pin status of digital output	0	R	U16		
	16	Reserved	0	R	U16		
	17	Reserved	0	R	U16		
	18	Reserved .	0	R	U16		
	1A	Display signal of QI analog input terminal, 0~10 V corresponds to 0 ~100% (to two decimal places)	0	R	U16		
	1B	Display actual pressure (Bar)	0	R	U16		
	1C	Display kw/ hr	0	R	U16		
	1D	Display motor's temperature °C	0	R	U16		
	1E	Display motor drive's over load in %	0	R	U16		
	1F	Display motor's over load in % of HES type A	0	R	U16		
	20	Display current at braking (Ampere)	0	R	U16		
	21	Display braking chopper's temperature °C	0	R	U16		

Delta Standard Mode (New definition)

Index	sub	R/W	Size	Descriptions			Speed Mode
				bit	Definition	Priority	
2060h	00h	R	U8				
	01h	RW	U16	0	Ack	4	0: fcmd =0 1: fcmd = Fset(Fpid)
				1	Dir	4	0: FWD run command 1: REV run command
				2			
				3	Halt	3	0: Drive runs until target speed is reached 1: Drive stops by declaration setting
				4	Hold	4	0: Drive runs until target speed is reached 1: Frequency stop at current frequency
				5	JOG	4	0:JOG OFF Pulse 1:JOG RUN
				6	QStop	2	Quick Stop
				7	Power	1	0: Power OFF 1: Power ON
				8	Ext_Cmd2	4	0 → 1: Clear the absolute position.
				14–8			
				15	RST	4	Pulse 1: Fault code cleared
	02h	RW	U16		Mode Cmd		0: Speed Mode
	03h	RW	U16				Speed command (unsigned decimal)
	04h	RW	U16				
	05h	RW	S32				
	06h	RW					
	07h	RW	S16				
	08h	RW	U16				
2061h	01h	R	U16	0	Arrive		Frequency reached
				1	Dir		0: Motor FWD run 1: Motor REV run
				2	Warn		Warning
				3	Error		Error detected
				4			
				5	JOG		JOG
				6	QStop		Quick stop
				7	Power ON		Switch ON
				15–8			
	02h	R					
	03h	R	U16				Actual output frequency
	04h	R					
	05h	R	S32				Actual position (absolute)
	06h	R					
	07h	R	S16				Actual torque

DS402 Standard

Index	Sub	Definition	Factory Setting	R/W	Size	Unit	PDO Map	Mode	Note
6007h	0	Abort connection option code	2	RW	S16		Yes		0: No action 2: Disable voltage 3: Quick Stop
603Fh	0	Error code	0	R0	U16		Yes		
6040h	0	Control word	0	RW	U16		Yes		
6041h	0	Status word	0	R0	U16		Yes		
6042h	0	vl target velocity	0	RW	S16	rpm	Yes	vl	
6043h	0	vl velocity demand	0	RO	S16	rpm	Yes	vl	
6044h	0	vl control effort	0	RO	S16	rpm	Yes	vl	
604Fh	0	vl ramp function time	10000	RW	U32	1ms	Yes	vl	Unit must be 100 ms, and check if the setting is 0.
6050h	0	vl slow down time	10000	RW	U32	1ms	Yes	vl	
6051h	0	vl quick stop time	1000	RW	U32	1ms	Yes	vl	
605Ah	0	Quick stop option code	2	RW	S16		No		0: Disable drive function 1: Slow down on slow down ramp 2: Slow down on quick stop ramp 5: Slow down on slow down ramp and stay in QUICK STOP 6: Slow down on quick stop ramp and stay in QUICK STOP
605Ch	0	Disable operation option code	1	RW	S16		No		0: Disable drive function 1: Slow down with slow down ramp; disable the drive function
6060h	0	Mode of operation	2	RW	S8		Yes		2: Velocity mode
6061h	0	Mode of operation display	2	RO	S8		Yes		Same as above

[This page intentionally left blank]

Appendix C: MSJ 220V & 380V Hybrid Servo Motor

C-1 Product Description

C-2 Model Explanation

C-3 Motor Specifications

C-4 Torque – Rotation characteristic curve

C-5 Product Appearance and Dimensions

C-6 Wiring of Servo Oil Pump

CAUTION	☑ This hybrid servo drive has gone through rigorous quality control tests at the factory before shipment. If the package is damaged during shipping, please contact your dealer. ☑ The accessories produced by Delta are only for using with Delta hybrid servo drive. Do not use with other drive to prevent damage. ☑ Do not use accessories, which are not produced or recommended by Delta on Delta hybrid servo drive.

C-1 Product Description

Introducing Delta MSJ servo motors, which are designed for hybrid servo system. The Delta MSJ servo motors have specialized functions to provide efficient output when working with VFD-VJ hybrid servo drives.

.

C-2 Model Name Explanation

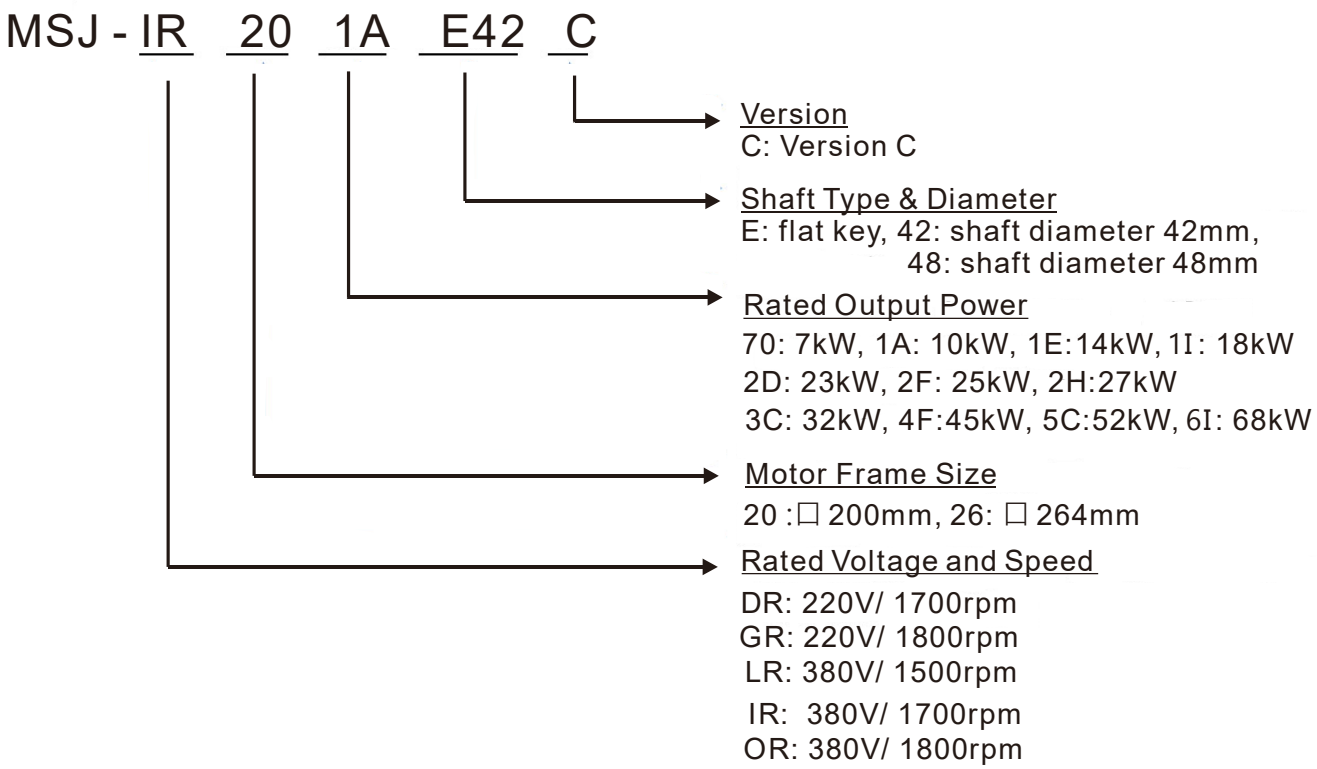

C-3 Motor Specifications

220V:

Model		MSJ-_____C				
		DR201AE42	**DR201EE42**	**DR201IE42**	**GR202DE42**	**DR202HE42**
Pr01-35 Motor ID#		216	218	220	222	224
Voltage		**220V**				
Rated Output Power	**kW**	**10**	**14**	**18**	**23**	**27**
No. of Poles		8				
Rated Torque	Nm	58	81.5	103	122	154
Maximum Torque	Nm	116	176	210	282	308
Rated Speed	rpm	1700	1700	1700	1800	1700
Maximum Speed*1	rpm	2100	2200	2200	2250	2200
Rated Current	A	38	53	69	87	101
Torque Constant	Nm/A	1.52	1.54	1.49	1.47	1.52
Voltage Constant	V/krpm	100	95	96.5	90	95
Phase Resistance	ohm	0.239	0.145	0.110	0.064	0.060
Inductance	mH	2.740	1.791	1.438	0.939	0.864
Rotor Moment of Inertia	kg-m^2	6.8 x10^{-3}	9.0 x10^{-3}	11.7 x10^{-3}	13.3 x10^{-3}	17.5 x10^{-3}
Weight	kg	46	53	59.5	67.5	83.6
Frame	mm	200 x 200				
Insulation Class		Class F (Winding Class H)				
Protection Class		IP54				
Efficiency Class		IE3 / GB30253-2013 (Chinese Standard on Minimum Allowable Values of Energy Efficiency and Energy Efficiency Grades				
Cooling Method		Fan cooling by AC Fan (220V$_{AC}$)				
Encoder		Resolver 2 Poles				
Motor Temperature Protection		PTC temperature protection and KTY84-130 temperature sensor *3				
Operating Environment		Temperature :-15 ~ 40ºC Humidity: 20 ~ 90% RH (Non-condensation) Altitude <1000m				
Installation Method		Flange / Support Legs				
Certifications		CE				

380V:

Model		MSJ-_____C								
		IR201AE42	IR201EE42	IR201IE42	OR202DE42	LR202FE42	IR203CE42	OR264FE48	IR265CE48	IR266IE48
Pr01-35 Motor ID#		217	219	221	223	225	227	229	231	TBA
Voltage		**380V**								
Rated Output Power	**kW**	**10**	**14**	**18**	**23**	**25**	**32**	**45**	**52**	**68**
# of Poles		8								
Rated Torque	Nm	58	83	103	120	159	180	240	295	385
Maximum Torque	Nm	112	155	208	215	336	320	365	455	695
Rated Speed	rpm	1700	1700	1700	1800	1500	1700	1800	1700	1700
Maximum Speed *1	rpm	2150	2150	2150	2250	1950	2150	2250	2150	2150
Rated Current	A	23	32.8	42.1	46.7	55.9	70	96.5	115	149
Torque Constant	Nm/A	2.52	2.53	2.45	2.57	2.85	2.6	2.49	2.57	2.58
Voltage Constant	V/krpm	171	171	180	171	192	177	175	182	190
Phase Resistance	ohm	0.673	0.396	0.319	0.271	0.232	0.148	0.088	0.074	0.047
Inductance	mH	8.584	6.218	4.663	3.995	3.636	2.740	2.385	2.305	1.721
Rotor Moment of Inertia	$kg\text{-}m^2$	7.4 $x10^{-3}$	9.6 $x10^{-3}$	11.6 $x10^{-3}$	13.8 $x10^{-3}$	18.0 $x10^{-3}$	19.1 $x10^{-3}$	41.6 $x10^{-3}$	50.5 $x10^{-3}$	61.4 $x10^{-3}$
Weight	kg	46	53	59.5	67.5	83.6	85	134	152	171
Frame	mm	200 x 200						264 x 264		
Insulation Class		Class F (Winding Class H)								
Protection Class		IP54								
Efficiency Class		IE3 / GB30253-2013 (Chinese Standard on Minimum Allowable Values of Energy Efficiency and Energy Efficiency Grades)								
Cooling Method		Fan Cooling (AC Fan $220V_{AC}$)								
Encoder		Resolver 2 Poles								
Motor Temperature Protection		PTC temperature protection*2 and KTY84-130 temperature sensor*3								
Operating Environment		Temperature: -15 ~ 40ºC Humidity 20 ~ 90% RH (Non-condensation) Altitude <1000m								
Installation Method		Flange / Support Legs								
Certifications		**CE**								

*1: This chart states the maximum operation speed of a motor with no field-weakening control.

*2: Set up PTC type Pr02-11 =2 to use PTC130 as temperature protection.

*3: Users are required to set up the parameter Pr02-09 PTC Level (factory setting: 130 ºC) when using the KTY84-130 temperature sensor (PTC type Pr02-11 =1) for motor overheating protection.

*4: Delta reserves the right to revise specifications without prior notice.

C-4 Torque – Rotation characteristic curve

220V:

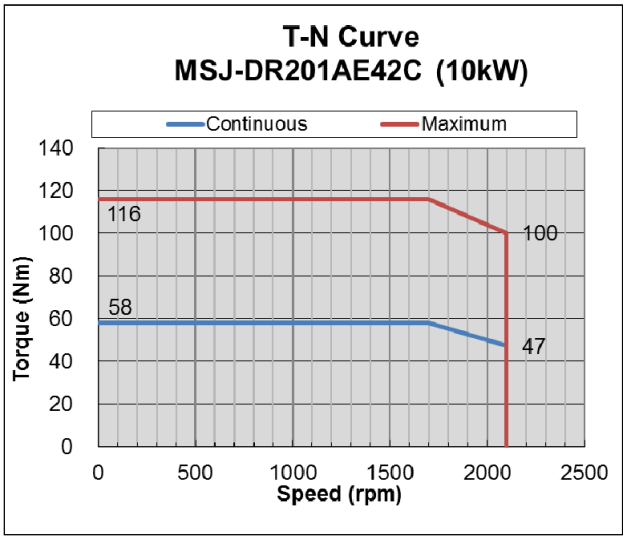

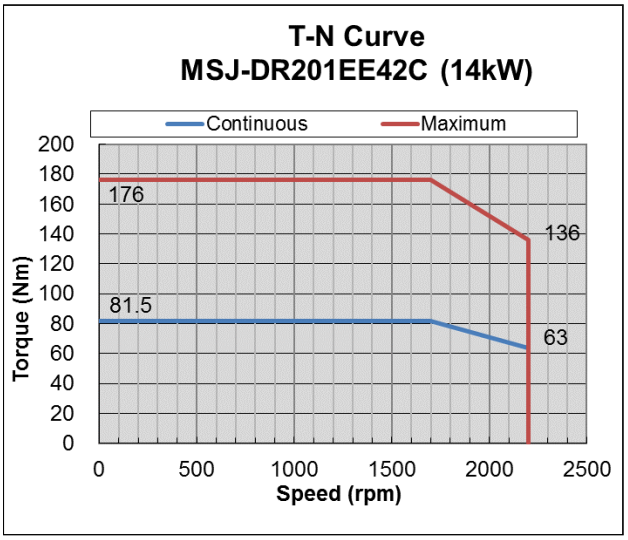

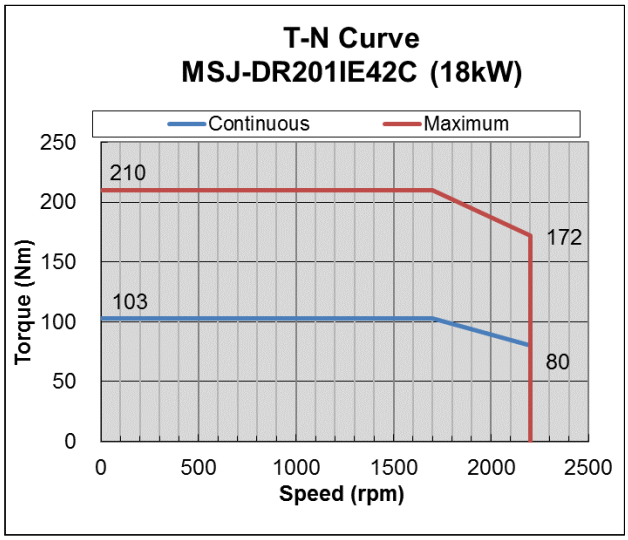

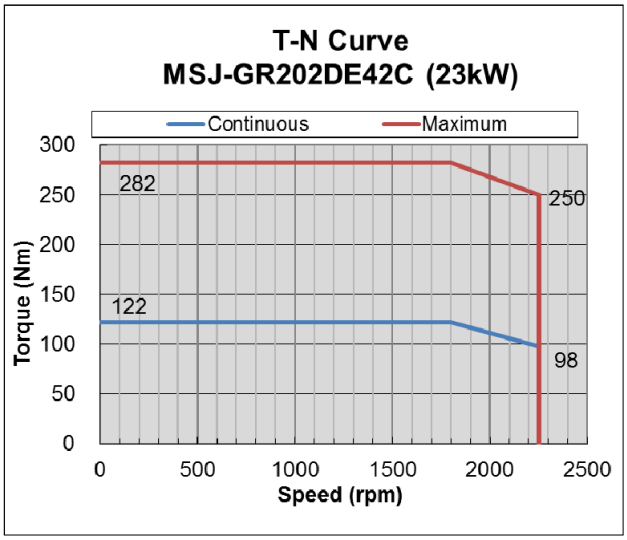

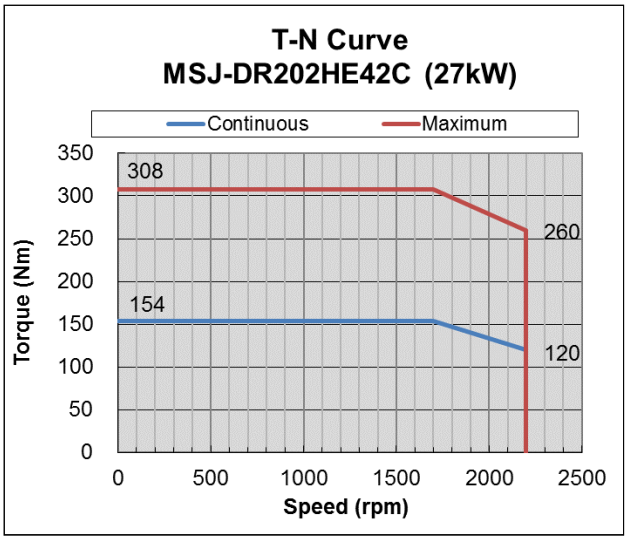

380V:

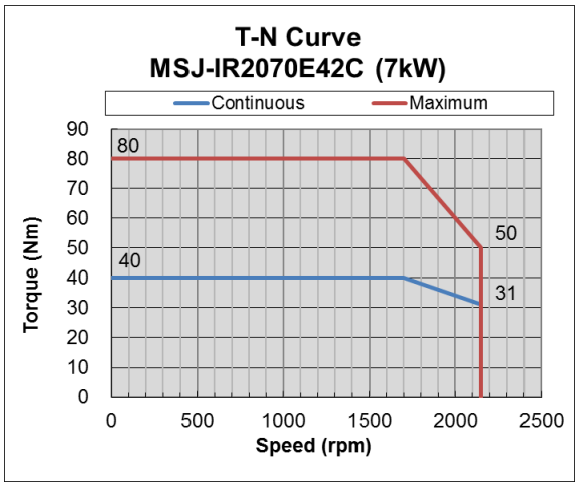
T-N Curve
MSJ-IR2070E42C (7kW)
Continuous
Maximum
Torque (Nm)
Speed (rpm)
80
50
40
31

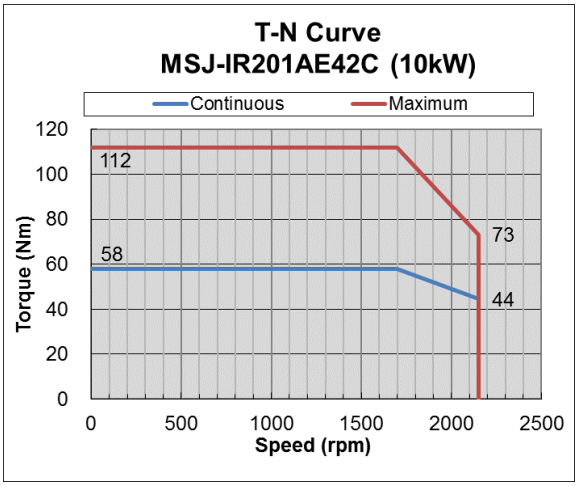
T-N Curve
MSJ-IR201AE42C (10kW)
Continuous
Maximum
Torque (Nm)
Speed (rpm)
112
73
58
44

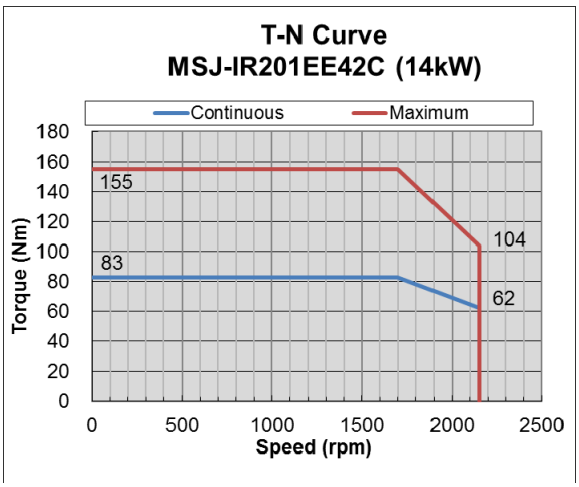
T-N Curve
MSJ-IR201EE42C (14kW)
Continuous
Maximum
Torque (Nm)
Speed (rpm)
155
104
83
62

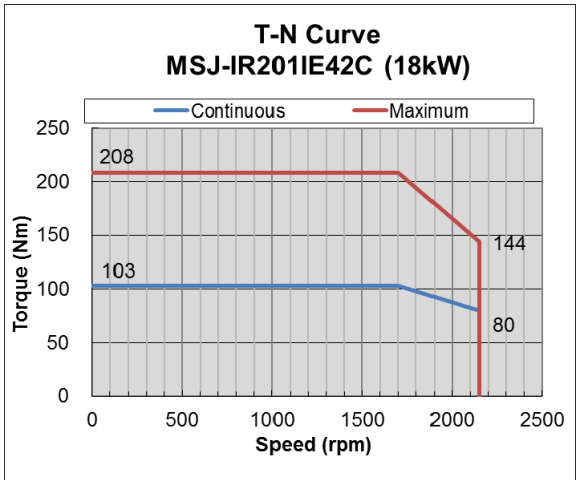
T-N Curve
MSJ-IR201IE42C (18kW)
Continuous
Maximum
Torque (Nm)
Speed (rpm)
208
144
103
80

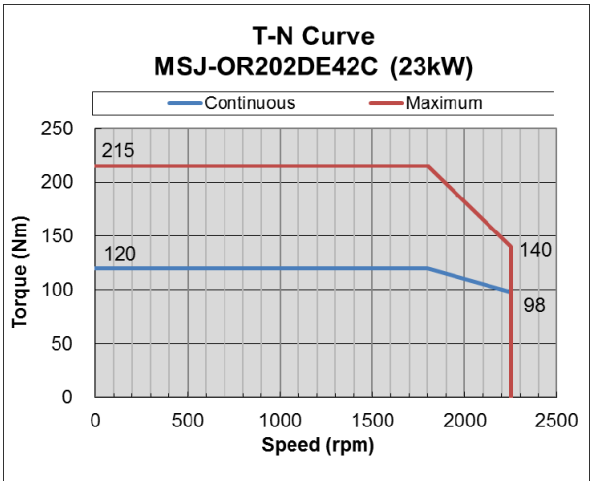
T-N Curve
MSJ-OR202DE42C (23kW)
Continuous
Maximum
Torque (Nm)
Speed (rpm)
215
140
120
98

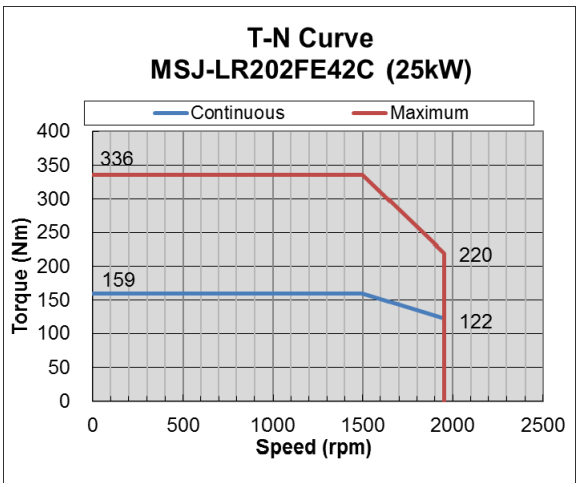
T-N Curve
MSJ-LR202FE42C (25kW)
Continuous
Maximum
Torque (Nm)
Speed (rpm)
336
220
159
122

380V:

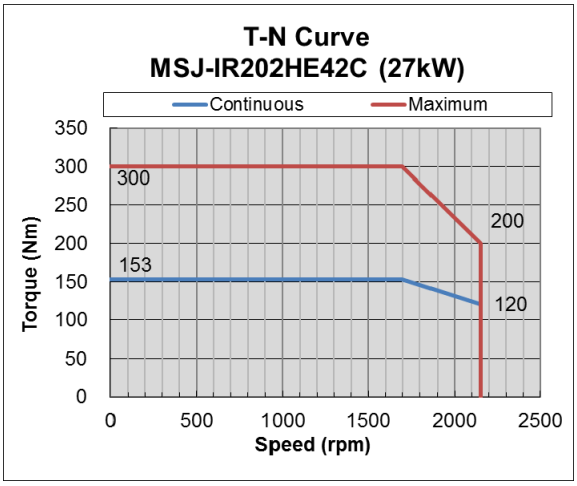
T-N Curve
MSJ-IR202HE42C (27kW)
Continuous
Maximum
Torque (Nm)
Speed (rpm)
300
200
153
120

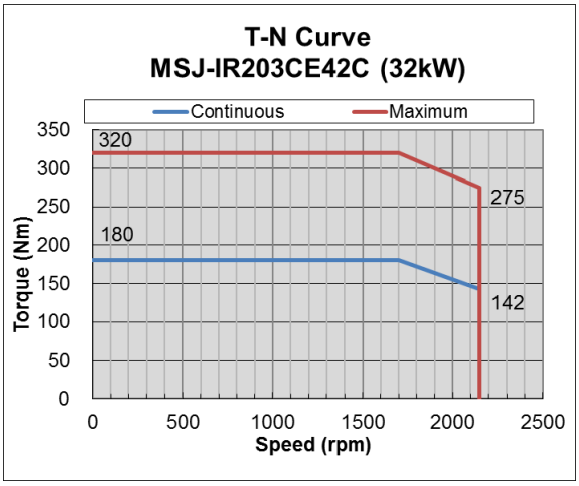
T-N Curve
MSJ-IR203CE42C (32kW)
Continuous
Maximum
Torque (Nm)
Speed (rpm)
320
275
180
142

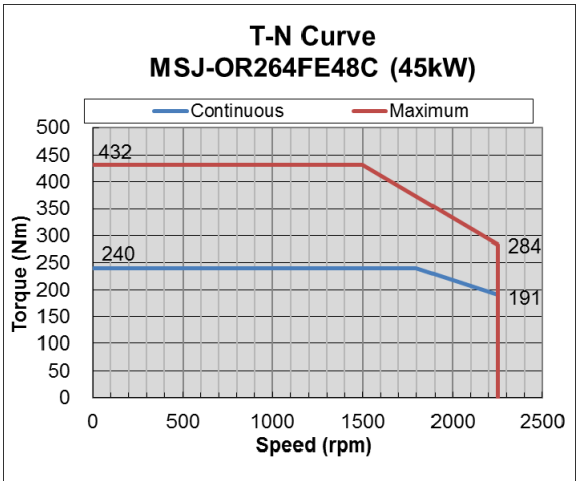
T-N Curve
MSJ-OR264FE48C (45kW)
Continuous
Maximum
Torque (Nm)
Speed (rpm)
432
284
240
191

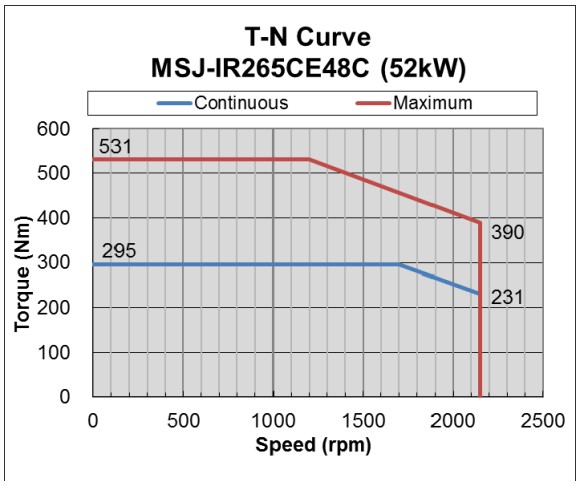
T-N Curve
MSJ-IR265CE48C (52kW)
Continuous
Maximum
Torque (Nm)
Speed (rpm)
531
390
295
231

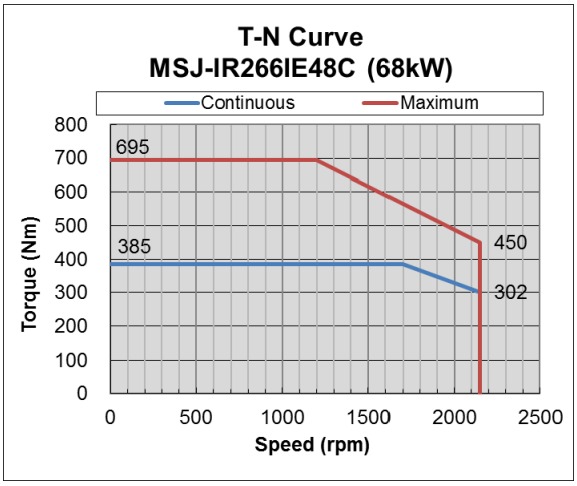
T-N Curve
MSJ-IR266IE48C (68kW)
Continuous
Maximum
Torque (Nm)
Speed (rpm)
695
450
385
302

C-5 Product Appearance and Dimensions

220V:

C-5-1: Frame 200

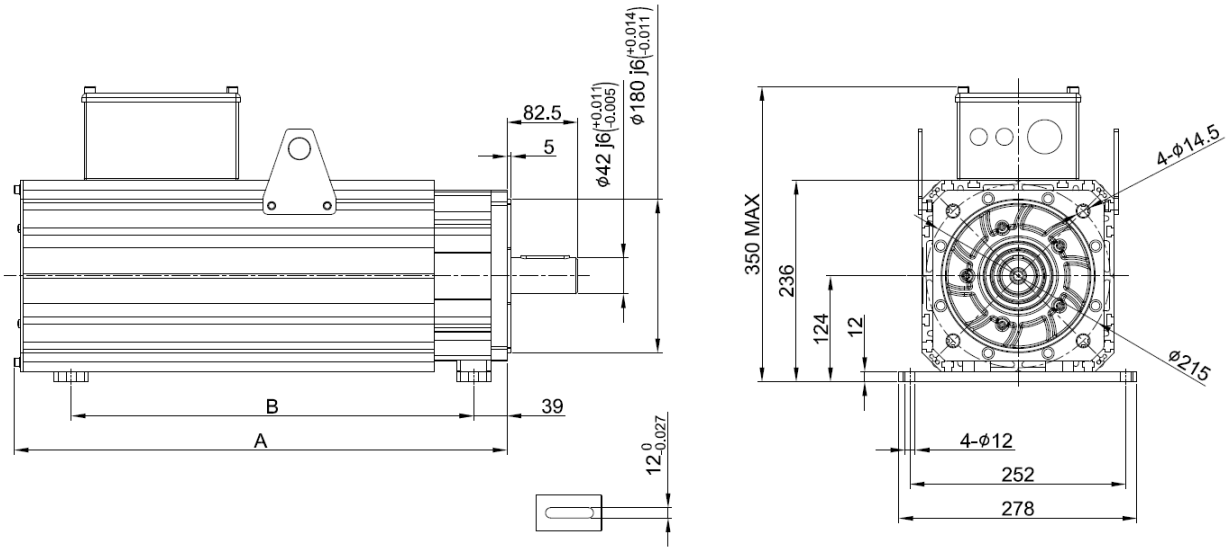

Model		MSJ-_____C				
		DR201AE42	**DR201EE42**	**DR201IE42**	**GR202DE42**	**DR202HE42**
A	mm	381	417	453	489	575
B	mm	285	310	350	395	470

*Note: Size of Model B can be customized according to your requirement.

380V:

C-5-2: Frame 200

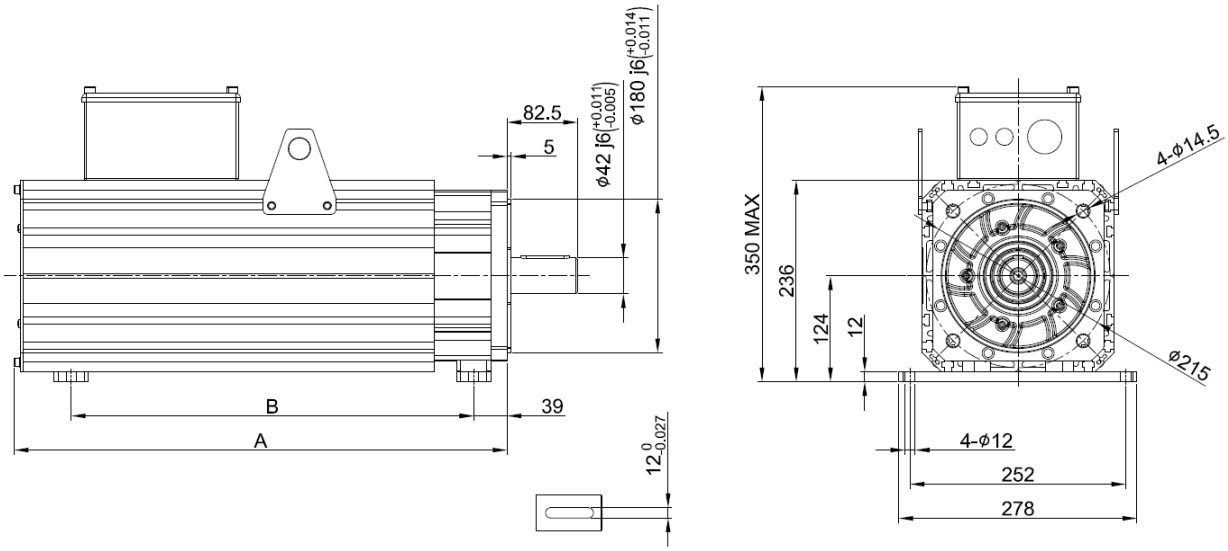

Model		MSJ-_____C					
		IR201AE42	IR201EE42	IR201IE42	OR202DE42	LR202FE42	IR203CE42C
A	mm	381	417	453	489	575	590
B	mm	285	310	350	395	470	470

* Note: Size of Model B can be customized according to your requirement.

C-5-3: Frame 264

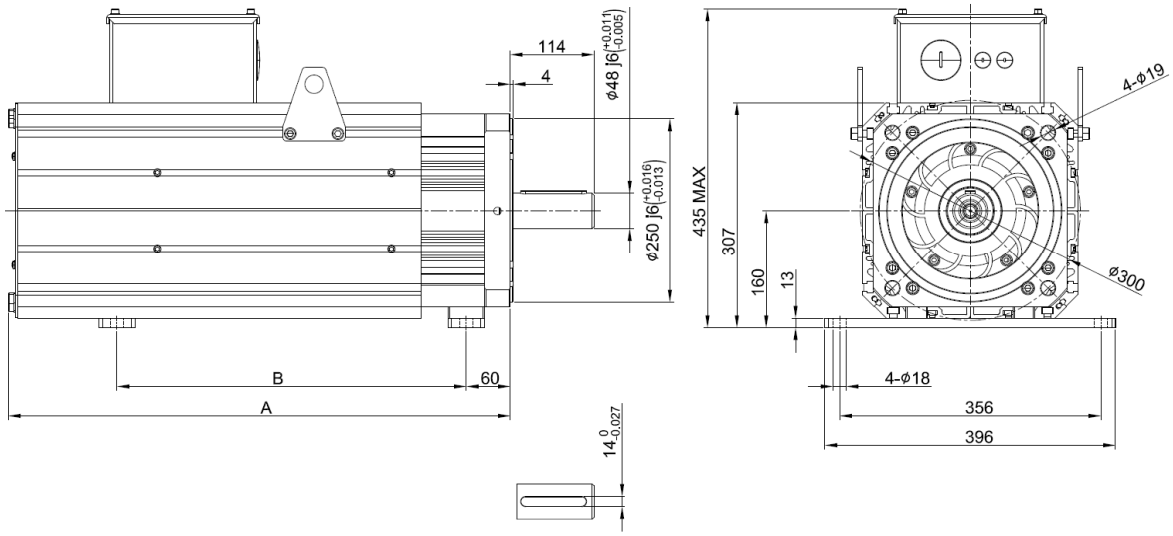

Model		MSJ-_____C		
		OR26 4FE48	IR26 5CE48	IR26 6IE48C
A	mm	577	631	684
B	mm	370	423	476

*Note: Size of Model B can be customized according to your requirement.

C-6 Wiring of Servo Oil Pump

C-6-1: Wiring Box of 220V & 380V

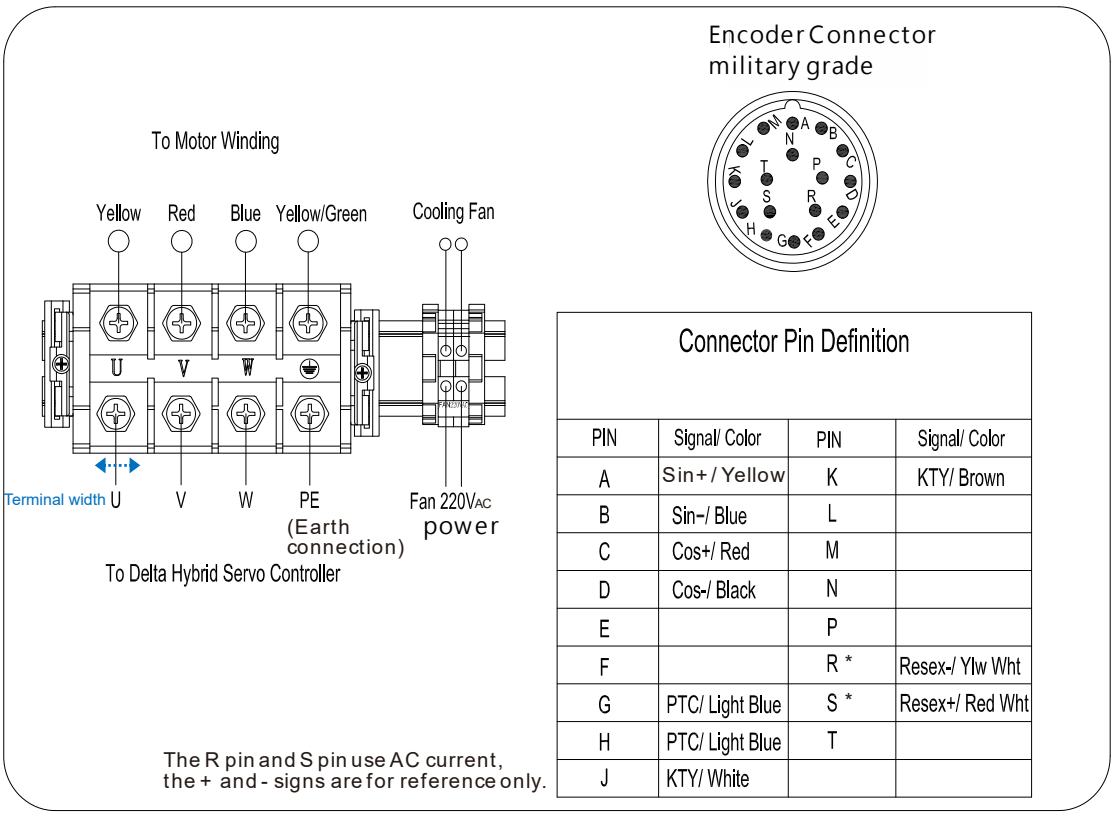

Connector Pin Definition

PIN	Signal/ Color	PIN	Signal/ Color
A	Sin+ / Yellow	K	KTY/ Brown
B	Sin-/ Blue	L	
C	Cos+/ Red	M	
D	Cos-/ Black	N	
E		P	
F		R *	Resex-/ Ylw Wht
G	PTC/ Light Blue	S *	Resex+/ Red Wht
H	PTC/ Light Blue	T	
J	KTY/ White		

C-6-2: Recommended Wiring Size and Temperature Rating

220V:

Model		MSJ-_____C				
		DR201AE42	DR201EE42	DR201IE42	GR202DE42	DR202FE42
Minimum Wiring Size	AWG	6	5	4	3	2
	mm^2	13.5	17	21	27	35
*Must use copper wires of temperature rating 90℃ for installation.						

380V:

Model			MSJ-_____C							
		IR2070E42	IR201AE42	IR201EE42	IR201IE42	OR202DE42	LR202FE42, IR202HE42	IR203CE42	OR264FE48, IR265CE48	IR266IE48
Minimum Wiring Size	AWG	10	8	7	6	5	4	3	2	1
	mm^2	5.3	8.5	10.5	13.5	17	21	27	35	45
	*Must use copper wires of temperature rating 90℃ for installation.									

C-6-3: Encoder Cable (CBHE-E5M)

220V & 380V:

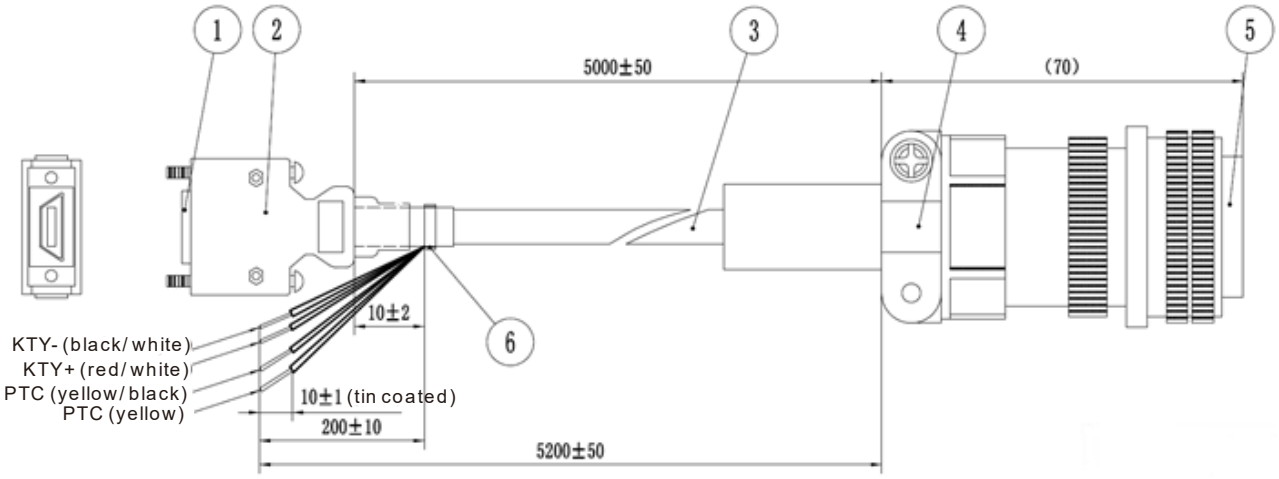

1	SCSI(MDR) Plug <Drive Side>
2	MDR Shell with SCSI terminal
3	Cable
4	Strain Relief
5	Military Connector <Motor Side>
6	Cable Tie